MITSUBISHI ELECTRIC

Lossnay

TECHNICAL MANUAL

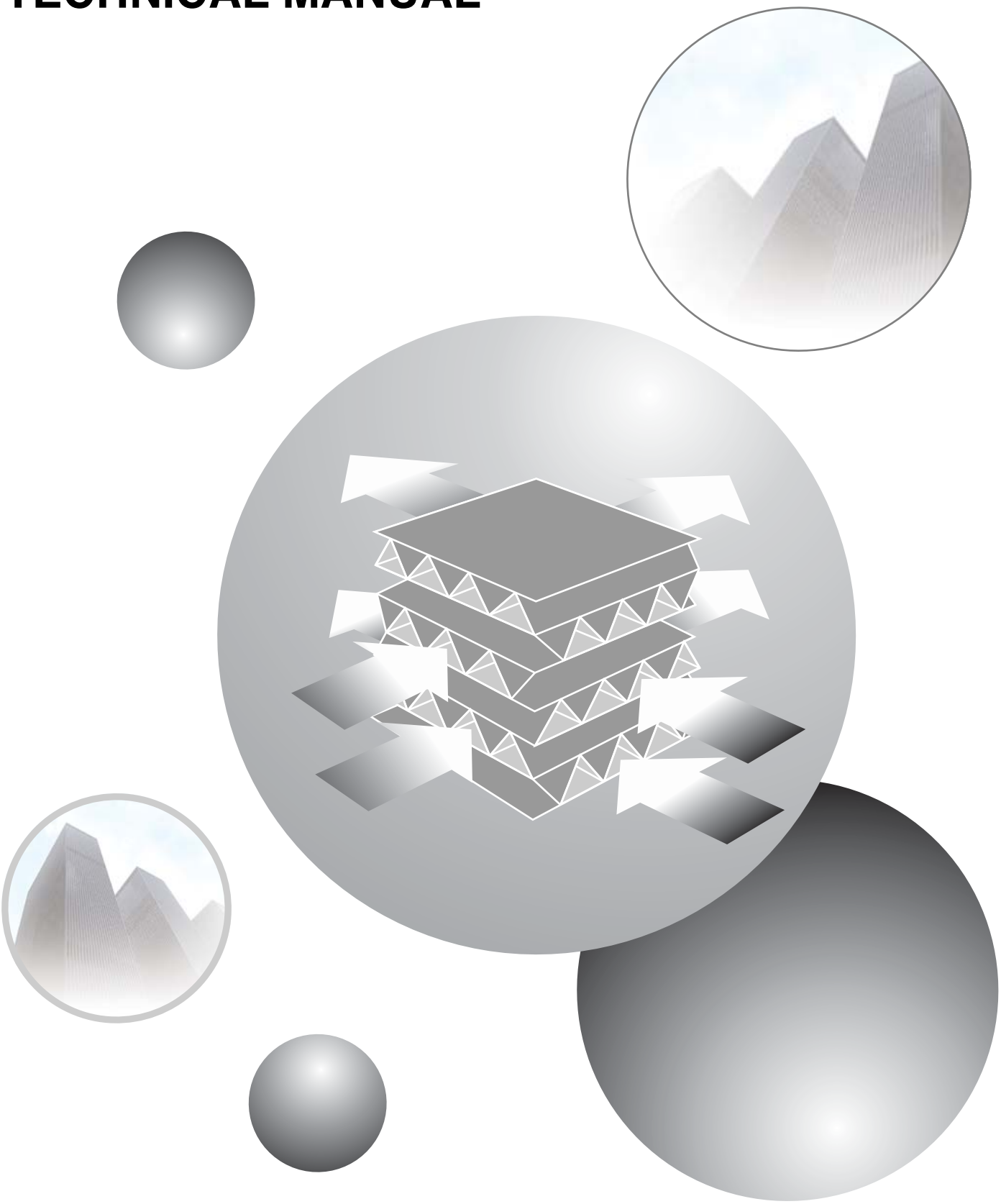

Lossnay Unit

CONTENTS

CHAPTER 1 Ventilation for Healthy Living

1. Necessity of Ventilation 2
2. Ventilation Standards 4
3. Ventilation Method 5
4. Ventilation Performance 8
5. Outdoor Air (ventilation) Load 10

CHAPTER 2 Lossnay Construction and Principle

1. Construction and Features of Lossnay 16
2. Construction and Principle of Core 16
3. Calculation of the Total Heat Recovery Efficiency 18
4. What is a Psychrometric Chart? 19
5. Calculation of Lossnay Heat Recovery 20

CHAPTER 3 General Technical Considerations

1. Lossnay Heat Recovery Effect 22
2. Example Heat Recovery Calculation 24
3. Calculation of Lossnay Economical Effects 26
4. Psychrometric Chart 28
5. The Result of No Virus (phage) Cross Contamination for the Lossnay Core and Determining Resistance of the Lossnay Core to Molds 29
6. Flame-proofing Properties of Lossnay Core 31
7. Lossnay Core's Soundproofing Properties Test 33
8. Change in Lossnay Core Over Time 34
9. Comparison of Heat Recovery Techniques 36

CHAPTER 4 Characteristics

1. How to Read the LGH Series Lossnay Characteristic Curves 40
2. Calculating the Static Pressure Loss 40
3. How to Obtain Efficiency from Characteristic Curves 44
4. Sound 45
5. NC Curves (LGH-RX4 Series) 51
6. List of Models 54

CHAPTER 5 System Design Recommendations

1. Lossnay Usage Conditions 58
2. Noise Value of Lossnay with Built-in Fans 59
3. Attachment of Air Filter 59
4. Duct Construction 59
5. By-pass Ventilation 59
6. Transmission Rate of Various Gases and Related Maximum Workplace Concentration 60
7. Solubility of Odors and Toxic Gases, etc., in Water and Effect on Lossnay Core 61
8. Positioning of the Supply/Exhaust Fans and the Air Transmission Rate (excluding moisture resistant total heat recovery units) 62
9. Combined Operation with other Air Conditioners 63
10. Automatic Ventilation Switching 64
11. Vertical Installation of LGH Series 65
12. Installation of Supplementary Fan Devices After Lossnay Unit 66

CHAPTER 6 Examples of Lossnay Applications

1. Large Office Building 68
2. Medium Size Office Building 71
3. Multipurpose Tenant Building 74
4. Urban Small-Scale Building 77
5. Hospitals 78
6. Schools 80
7. Hotels (convention halls, wedding halls) 82
8. Public Halls (combination facilities such as day-care centres) 85

CHAPTER 7 Installation Considerations

1. LGH-Series Lossnay Ceiling Embedded-Type (LGH-RX4 Series) 86
2. Building Lossnay Unit Horizontal-type (LU-500) 89

CHAPTER 8 Filtering for Freshness

1. Necessity of Filters 92
2. Data Regarding Dust 92
3. Calculation Table for Dust Collection Efficiency of Each Lossnay Filter 93
4. Comparison of Dust Collection Efficiency Measurement Methods 95
5. Calculation of Dust Concentration 97
6. Certificate in EU 97

CHAPTER 9 Service Life and Maintenance

1. Service Life 100
2. Cleaning the Lossnay Core and Pre-filter 100

CHAPTER 10 Ventilation Standards in Each Country

1. Ventilation Standards in Each Country 102
2. U.S. 103
3. U.K. 103

CHAPTER 11 Lossnay Q and A 106

CHAPTER 1
Ventilation for Healthy Living

Fresh outdoor air must be introduced constantly at a set ratio in an air conditioning system. This fresh air is introduced to be mixed with the return air from the room, to adjust the temperature and humidity, supply oxygen, reduce body and other odors, remove tobacco smoke and to increase the cleanness of the air.
The standard ventilation (outdoor air intake) volume is determined according to the type of application, estimated number of persons in the room, room area, and relevant regulations. Systems which accurately facilitate these requirements are increasingly being required to be installed in buildings.

1. Necessity of Ventilation

The purpose of ventilation is basically divided into “oxygen supply”, “cleaning of air”, “temperature control” and “humidity control”. Cleaning of the air includes the elimination of “odors”, “gases”, “dust” and “bacteria”. The needs of ventilation are divided into “personal comfort”, “assurance of environment for animals and plants”, and “assurance of environments for machinery and constructed materials”.
In Japan legal regulations regarding ventilation are set in the Building Srandard Law Enforcement Ordinance and the “Building Management Law” for securing a sanitary environment in buildings. These are in general agreeance with similar regulations in other countries.

1.1 Room air environment in buildings

In Japan, the Building Management Law, a law concerning the sanitary environment of buildings, designates eleven applications including offices, shops, and schools with a total floor area of 3,000 m^2 or more, as buildings. According to this law maintenance and management of the ventilation and water supply and discharge according to the Environmental Sanitation Management Standards is obligatory.

The following table gives a specific account of buildings in Tokyo.
(Tokyo Food and Environment Guidance Center Report)

Specific Account of Buildings in Tokyo (March, 2003)

	Number of buildings	%
Offices	1,467	56.7
Shops	309	22.0
Department Stores	63	2.4
Schools	418	16.2
Inns	123	4.8
Theaters	86	3.3
Libraries	12	0.5
Museums	11	0.4
Assembly Halls	63	2.4
Art Museums	8	0.3
Amusement Centers	27	1.0
Total	2,587	100.0

Note: Excludes buildings with an expanded floor space of 3,000 to 5,000 m^2 in particular areas.

The ratio of results of the air quality measurement public inspection and the standard values that were not met (percentage of unsuitability) for the approximately 500 buildings examined in 1980 is shown in the chart at the right.

There was a large decrease in unsuitable percentages of floating particles, but there was almost no change in temperature and carbon dioxide. Values for temperature, ventilation, and carbon monoxide almost entirely cleared the standard values, and are excluded. The study from 2002 shows the item with the highest percentage of unsuitability as temperature with 2.7%, followed by carbon dioxide at 22.8%.

Percentage of unsiutability of air quality by year

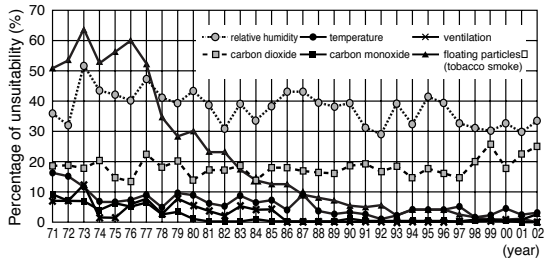

(From reference data in the 2003 edition of the “Water Supply Division, Dept. of Localized PublicHealth, Tokyo Metropolitan Government, Bureau of Public Health”)

In the case of Japan, an Instruction Guideline based on these regulations has been issued, and unified guidance is carried out. Part of the Instruction Guideline regarding ventilation is shown below.

- The fresh outdoor air intake must be 10 m or higher from ground level, and be distanced appropriately from the exhaust air outlet. (Neighbouring buildings must also be considered.)
- The fresh outdoor air intake volume must be 25 to 30 m^3/h·person in design.
- An air volume measurement hole must be installed at an effective position to measure the treated air volume of the ventilating device.
- The position and shape of the supply diffuser and return grille must be selected so the air environment in the room is distributed evenly.

1.2 Effect of air contamination on human bodies

Effect of oxygen (O_2) concentration

Concentration (%)	Standards and effect of concentration changes
Approx. 21	Standard atmosphere.
20.5	Ventilation air volume standard will be a guideline where concentration does not decrease more than 0.5% from normal value. (The Building Standard Law of Japan)
20 - 19	An oxygen deficiency of this amount does not directly endanger life in a normal air pressure, but if there is a combustion device in the area, the generation of CO will increase rapidly due to incomplete combustion.
18	Industrial Safety and Health Act. (Hypoxia prevention regulations.)
16	Normal concentration in exhaled air.
16 - 12	Increase in pulse and breathing resulting in dizziness and headaches.
15	Flame in combustion devices will extinguish.
12	Threat to life in short term.
7	Fatal

Effect of carbon monoxide (CO) 10,000 ppm = 1%

Concentration (ppm)	Effect of concentration changes	
0.01 - 0.2	Standard atmosphere.	
5	Considered to be the long-term tolerable value.	Apprpx. 5 ppm is an annual average value in city areas. This value may exceed 100 ppm near roads, in tunnels and parking areas.
10	The Building Standard Law of Japan, Law for Maintenance of Sanitation in Buildings. Environmental standard 24-hour average.	
20	Considered to be the short-term tolerable value. Environmental standard 8-hour average.	
50	Tolerable concentration for labor environment. (Japan Industrial Sanitation Association)	
100	No effect for 3 hours. Effect noticed after 6 hours. Headache, illness after 9 hours; harmful for long-term but not fatal.	
200	Light headache in the forehead in 2 to 3 hours.	
400	Headache in the forehead, nausea in 1 to 2 hours; headache in the back of head in 2.5 to 3 hours.	
800	Headache, dizziness, nausea, convulsions in 45 minutes. Comatose in 2 hours.	
1,600	Headache, dizziness in 20 minutes. Death in 2 hours.	
3,200	Headache, dizziness in 5 to 10 minutes. Death in 30 minutes.	
6,400	Death in 10 to 15 minutes.	
12,800	Death in 1 to 3 minutes.	
Several 10,000 ppm (Several %)	This level may be found in automobile exhaust.	

Effect of carbon dioxide (CO_2)

Concentration (%)	Effect of concentration changes	
0.03 (0.04)	Standard atmosphere.	
0.04 - 0.06	City air.	
0.07	Tolerable concentration when many people stay for long time.	There is no toxic level in CO_2 alone. However, these tolerable concentrations are a guideline of the contamination estimated when the physical and chemical properties of the air deteriorate in proportion to the increase of CO_2.
0.10	General tolerable concentration. The Building Standard Law of Japan, Law for Maintenance of Sanitation in Buildings.	
0.15	Tolerable concentration used for ventilation calculations.	
0.2 - 0.5	Observed as relatively poor.	
0.5 or more	Observed as the poorest.	
0.5	Long-term safety limits (U.S. Labor Sanitation) ACGIH, regulation of laborer offices.	
2	Depth of breathing and inhalation volume increases 30%.	
3	Work and physical functions deteriorate, breathing doubles.	
4	Normal exhalation concentration.	
4 - 5	The respiratory center is stimulated; depth and times of breathing increases. Dangerous if breathed in for a long period. If an O_2 deficiency also occurs, trouble will occur sooner and be more dangerous.	
8	When breathed in for 10 minutes, breathing difficulties, redness in the face and headaches will occur. The trouble will worsen when there is also a deficiency of O_2.	
18 or more	Fatal	

Note: According to Facility Check List published by Kagekuni-sha.

1.3 Effect of air contamination in buildings

- Dirtiness of interior
  New ceilings, walls and ornaments will turn yellow in one to two years. This is caused by dust and the tar in tobacco smoke.

2. Ventilation Standards

The legal standards for ventilation differ according to each country. Please follow the standards set by the country. In the US, Ashrae revised their standards in 1989 becoming more strict.
In Japan, regulations are set in the The Building Standard Law of Japan Enforcement Ordinance, the so-called “Building Management Law” for securing a sanitary environment in buildings. According to the Building Standards Law, a minimum of 20 m^3/h per person of ventilation air is required.

3. Ventilation Method

3.1 Ventilation class and selection points

An appropriate ventilation method must be selected according to the purpose.
Ventilation is composed of “Supply air” and “Exhaust air” functions. These functions are classified according to natural flow or mechanical ventilation using a fan (forced ventilation).

Classification of ventilation (according to Building Standards Law)

	Supply	Exhaust	Ventilation volume	Room pressure
Class 1	Mechanical	Mechanical	Random (constant)	Random
Class 2	Mechanical	Natural	Random (constant)	Positive pressure
Class 3	Natural	Mechanical	Random (constant)	Negative pressure
Class 4	Natural	Mechanical & natural	Limited (inconstant)	Negative pressure

Classification of mechanical ventilation

	Ex. of application	System effect	Design and construction properties	Selection points
1. Class 1 ventilation Fresh outdoor air is mechanically brought in and simultaneously the stale air in the room is mechanically discharged. 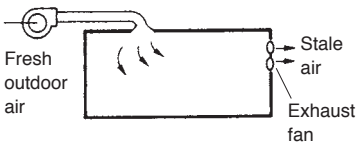 	• Ventilation of air conditioned rooms. (buildings, hospitals, etc.) • Ventilation of room not facing an outer wall. (basement, etc.) • Ventilation of large room. (office, large conference room, hall, etc.)	By changing the balance of the supply fan and exhaust fan’s air volumes, the pressure in the room can be balanced freely, and the interrelation with neighboring spaces can be set freely.	• An ideal design in which the supply air diffuser and exhaust air outlet position relation and air volume, etc., can be set freely is possible. • A system which adjusts the temperature and humidity of the supply air diffuser flow to the room environment can be incorporated. • The supply and exhaust volume can be set freely according to the changes in conditions.	• Accurate supply air diffuser can be maintained. • The room pressure balance can be maintained. • The supply air diffuser temperature and humidity can be adjusted and dust treatment is possible.
2. Class 2 ventilation Fresh outdoor air is mechanically brought in and the exhaust air is discharged from the exhaust air outlet (natural). 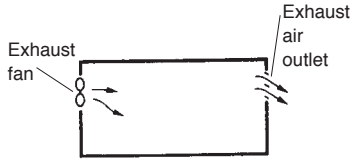 	• Surgery theatre. • Clean rooms. • Foodstuff processing factories.	As the room is pressurized, the flow of odors and dust, etc., from neighboring areas can be prevented.	• The position and shape of the supply air diffuser can be set. • The temperature and humidity of the supply air diffuser flow can be set accordingly, and dust can be removed as required.	• The pressure is positive. • The supply air diffuser temperature and humidity can be adjusted, and dust treatment is possible. • The positional relation of the exhaust air outlet to the supply air diffuser is important.
3. Class 3 ventilation The stale air in the room is mechanically discharged and simultaneously fresh outdoor air is mechanically introduced from the supply air diffuser (natural). 	• Local ventilation in kitchens. • Ventilation of hot exhaust air from machine room, etc. • Ventilation of humid exhaust air from indoor pools, bath-rooms, etc. • General simple ventilation.	The exhaust air is removed from a local position in the room, and dispersion of the stale air can be prevented by applying an entire negative pressure.	• Effective exhausting of dispersed stale air generation sites is possible from a local exhaust air outlet. • Ventilation in which the air flow is not felt is possible with the supply air diffuser setting method.	• The room pressure is negative. • Local exhaust is possible. • Ventilation without dispersing stale air is possible. • Ventilation with reduced air flow is possible. • The positional relation of the exhaust air outlet to the supply air diffuser is important.

3.2 Comparison of ventilation methods

There are two main types of ventilation methods.

Centralized ventilation method
This is mainly used in large buildings, with the fresh outdoor air intake being installed in one machine room. For this method, primary treatment of the fresh outdoor air, such as heat recovery to the intake air and dust removal is performed being distribution to the building by ducts.

Independent zoned ventilation method
This is mainly used in small to medium sized buildings, with areas being ventilated using fresh outdoor air intakes formed of independent ventilation devices. The rate of use of this method has recently increased as independent control is becoming ever more feasible.

Centralized ventilation method

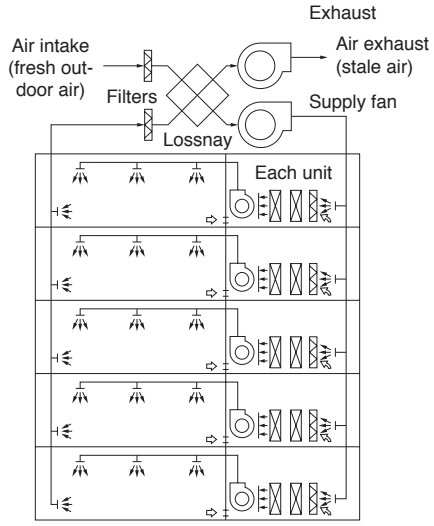

Independent zoned ventilation method

1) System operation with cassette-type air conditioner

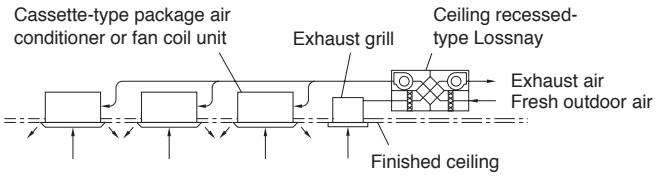

2) System operation with ceiling embedded-type air conditioner

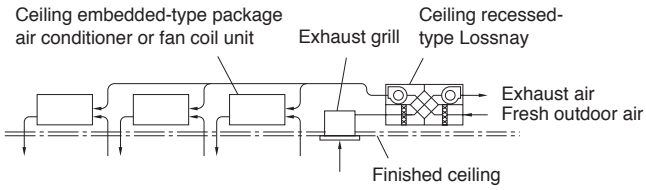

3) Independent operation with ceiling suspended-type air conditioner

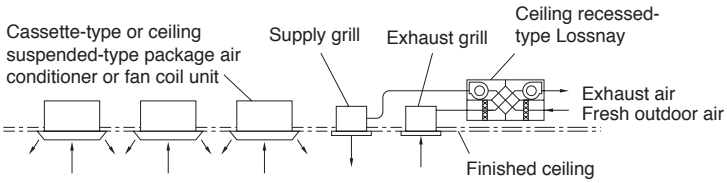

Comparison of centralized ventilation method and independent zoned ventilation method

	Centralized ventilation method	Independent zoned ventilation method
Fan power	The air transfer distance is long thus requiring much fan power.	As the air transfer distance is short, the fan power is small.
Installation space	• Independent equipment room is required. • Duct space is required. • Penetration of floors with vertical shaft is not desired in terms of fire prevention.	• Independent equipment room is not required. • Piping space is required only above the ceiling.
Zoning	Generalized per system.	Can be utilised for any one area.
Designability	• Design of outer wall is not lost. • The indoor supply air diffuser and return grille can be selected freely for an appropriate design.	• The number of intakes and exhaust air outlets on the outer wall will increase; design must be considered. • The design will be fixed due to the installation fittings, so the design of the intakes and exhaust air outlets must be considered.
Clarification of costs	As there are many common-use areas, if the building is a tenant building, an accurate assessment of operating cost is difficult.	Invoicing for each zone separately is possible, even in a tenant building.
Controllability	• As the usage time setting and ventilation volume control, etc., is performed in a central monitoring room, the user's needs may not be met appropriately. • A large amount of ventilation is required even for a few persons.	• The user in each zone can operate the ventilator freely. • The ventilator can be operated even during off-peak hours.
Comfort	• An ideal supply air diffuser and return grille position can be selected as the supply air diffuser and return grilles can be laid out freely. • The only noise in the room is the aerodynamic sound. • Anti-vibration measures must be taken as the fan in the equipment room is large.	• Consideration must be made of the noise from the main unit. • Anti-vibration measures are often not required as the unit is compact and the vibration generated can be dispersed.
Maintenance and management	• Centralized management is easy as it can be performed in the equipment room. • The equipment can be inspected at any time.	• Work efficiency is poor as the equipment is not centrally located. • An individual unit can be inspected only when the room it serves is vacant.
Trouble correspondence	• Large as the entire system is affected. • Immediate inspection can be performed in the equipment room.	• Limited as only independent units are affected. • Consultation with the tenant is required prior to inspection of an individual unit.

4. Ventilation Performance

The ventilation performance is largely affected by the installation conditions. Ample performance may not be achieved unless the model and usage methods are selected according to the conditions.
Generally, the ventilation performance is expressed by “Air volume” and “wind pressure (static pressure)”, and these are necessary when considering ventilation.

4.1 Air volume

Air volume expresses the volume of air exhausted (or supplied) by the unit in a given period. Generally, this is expressed as m^3/hr (hour).

4.2 Wind pressure

When a piece of paper is placed in front of a fan and let go, the piece of paper will be blown away. The force that blows the paper away is called the wind pressure, and this is normally expressed in units of Pa. The wind pressure is divided into the following three types:

4.2.1 Static pressure

This is the force that presses the surroundings when the air is still such as in an automobile tyre or rubber balloon. For example, in a water gun, the hydraulic pressure increases when pressed by a piston, and if there is a small hole, the water sprays out with force. The pressure of this water is equivalent to the static pressure for air. The higher the pressure is, the further the water (air) can be sprayed.

4.2.2 Dynamic pressure

This expresses the speed at which air flows, and can be thought of as the force at which a typhoon presses against a building.

4.2.3 Total pressure

This is the total force that wind has, and is the sum of the static pressure and dynamic pressure.

4.3 Measurement of the air volume and wind pressure

Mitsubishi measures the machine's air volume and wind pressure with a device as shown below according to the Japan Industrial Standards (JIS B 8628).

Measuring device using orifice (JIS B 8628 standards)

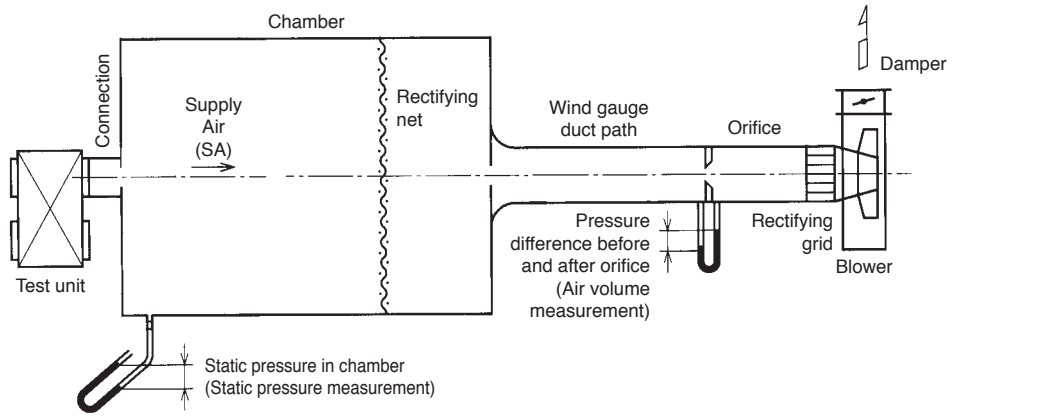

A) When measuring the supply air volume (with the orifice plate)

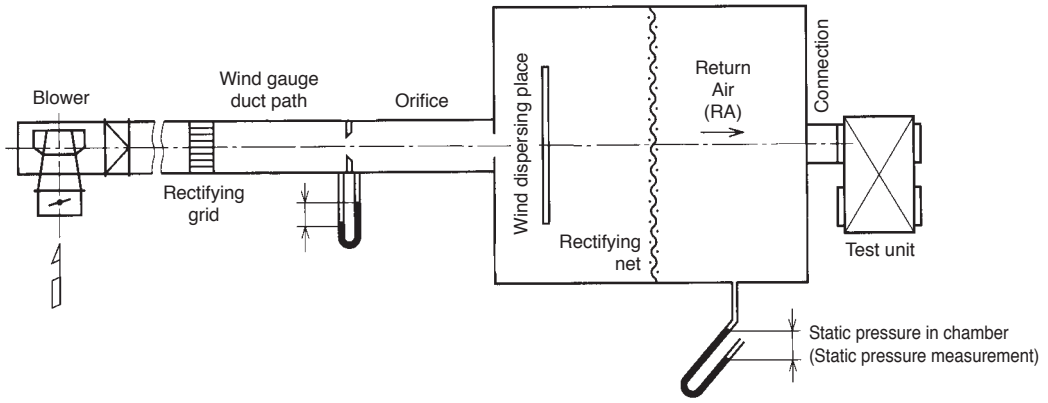

B) When measuring the return air volume (with the orifice plate)

Measurement method

The unit is operated with the throttle device fully closed. There is no air flow at this time, and the air volume is 0. The maximum point of the static pressure (A point, the static pressure at this point is called the totally closed pressure) can be obtained. Next, the throttle device is gradually opened, the auxiliary fan is operated, and the middle points (points B, C and D) are obtained. Finally, the throttle device is completely opened, and the auxiliary fan is operated until the static pressure in the chamber reaches 0. The maximum point of the air volume (point E, the air volume at this point is called the fully opened air volume) is obtained. The points are connected as shown below, and are expressed as air volume, static pressure curves (Q-H curve).

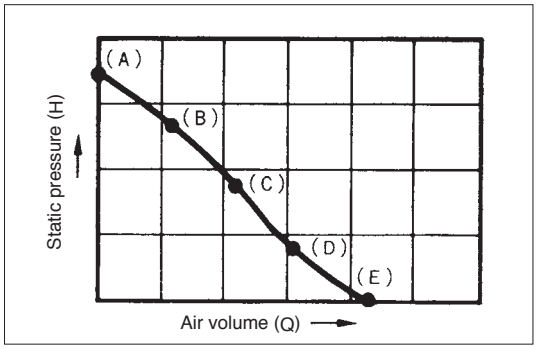

5. Outdoor Air (ventilation) Load

5.1 How to calculate each approximate load

The outdoor air load can be calculated with the following formula if the required outside air intake volume Q m^3/h to be introduced is known:

(Outdoor air load) = $\gamma \cdot Q_F \cdot (i_O - i_R)$
= γ [kg/m^3] × S [m^2] × k × n [person/m^2] × Vf [m^3/h·person] × (i_O - i_R): Δi [kJ/kg]

γ : Specific gravity of air - 1.2 kg/m^3
S : Building's airconditioned area
k : Thermal coefficient; generally 0.7 - 0.8.
n : The average population concentration is the inverse of the occupancy area per person. If the number of persons in the room is unclear, refer to the Floor space per person table below.
Vf : Outdoor air intake volume per person
Refer to the Required outdoor air intake volume per person table below.
i_O : Outdoor air enthalpy - kJ/kg
i_R : Indoor enthalpy - kJ/kg

Floor space per person table (m^2)
(According to the Japan Federation of Architects and Building Engineers Associations)

	Office building	Department store, shop			Restaurant	Teatre or cinema hall
		Average	Crowded	Empty		
General design	4 - 7	0.5 - 2	0.5 - 2	5 - 8	1 - 2	0.4 - 0.6
value	5	3.0	1.0	6.0	1.5	0.5

Required outdoor air intake volume per person table (m^3/h·person)

Degree of smoking	Application example	Required ventilation volume	
		Recommended value	Minimum value
Extremely heavy	Broker's office Newspaper editing room Conference room	85	51
Quite heavy	Bar Cabaret	51	42.5
Heavy	Office Restaurant	25.5	17 20
Light	Shop Department store	25.5	17
None	Theatre Hospital room	25.5 34	17 25.5

⚠ Caution

The application of this table to each type of room should be carefully considered in relation to the degree of smoking in the room.

Example calculations of determining ventilation load during both cooling and heating are given as follows:

5.2 Ventilation load during cooling (in general office building)

● Classification of cooling load

	Class	
(a)	Indoor infiltration heat	Heat from walls (q_{WS}) Heat from glass { from direct sunlight (q_{GS}) / from conduction & convection (q_{GS}) } Accumulated heat load in walls (q_{SS})
(b)	Indoor generated heat	Generated heat from people { Sensible heat (q_{HS}) / Latent heat (q_{HL}) } Genarated heat from electrical equipment { Sensible heat (q_{ES}) / Latent heat (q_{EL}) }
(c)	Reheating load	(q_{RL})
(d)	Outdoor air load	{ Sensible heat (q_{FS}) / Latent heat (q_{FL}) }

(a) is the heat infiltrating the room, and often is 30 to 40% of the entire cooling load.
(b) is the heat generated in the room.
(c) is applies only when reheating is necessary.
(d) is the heat generated when outdoor air is mixed into part of the supply air diffuser volume and introduced into the room. The outdoor air is introduced to provide ventilation for the people in the room, and is referred to as the ventilating load.

Typical load values (during cooling)

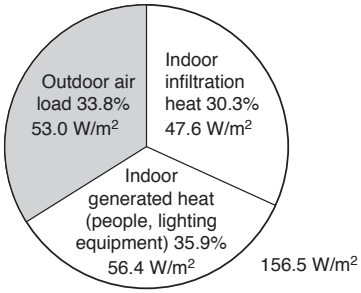

Type of load		Load
Outdoor air load		53.0 W/m^2
Indoor generated heat	People	26.4 W/m^2
	Lighting equipment	30.0 W/m^2
Indoor infiltration heat		47.6 W/m^2
Total		157.0 W/m^2

Conditions: Middle floor of a general office building facing south.

Cooling load per unit area

When the volume of outdoor air per person is 25 m^3/h, and the number of persons per 1 m^2 is 0.2, the cooling load will be approximately 157.0 W/m^2.
How these values are determined can be seen as follows:

● Outdoor air load

Air conditions <Standard design air conditions in Tokyo>

		Dry bulb temp.	Relative humidity	Wet bulb temp.	Enthalpy	Enthalpy difference
Cooling	Outdoor air	33 °C	63%	27 °C	85 kJ/kg	31.8 kJ/kg
	Indoors	26 °C	50%	18.7 °C	53.2 kJ/kg	

When the load per floor area of 1 m^2 with a ventilation volume of 25 m^3/h·person is calculated with the above air conditions, the following is obtained:

Outdoor air (ventilation) load = 1.2 kg/m^3 (Specific gravity of air) × 0.2 persons/m^2 (no. of persons per 1 m^2) × 25 m^3/h·person (outdoor air volume) × 31.8 kJ/kg (air enthalpy difference indoors/outdoors) = 190.8 kJ/h·m^2 (530 W/m^2)

The Lossnay recuperates approximately 70% of the exhaust air load and saves on approximately 20% of the total load.

● Determining internal heat gain

When classifying loads, the internal heat gain (indoor generated heat + indoor infiltration heat) will be the value of the outdoor air load subtracted from the approximate cooling load when it is assumed that there is no reheating load.

(Internal heat gain)
= 157.0 W/m^2 – 53.0 W/m^2 = 104.0 W/m^2

- This value of internal heat gain is based on assumptions for typical loads. To determine individual levels of internal heat gain, the following is suggested:

● Indoor generated heat

(1) Heat generated from people
Heat generation design value per person in office

Sensible heat (SH) = 63.0 W·person
Latent heat (LH) = 69.0 W·person
Total heat (TH) = 132.0 W·person

The heat generated per 1 m^2 of floor space is

(heat generated from people)
= 132.0 W·person × 0.2 person/m^2 = 26.4 W/m^2

(2) Heat generated from electrical equipment (lighting)
The approximate value of the room illuminance and power for lighting for a general office with illuminance of 300 - 350 Lux, is 20 - 30 W/m^2.

● Indoor infiltration heat

This is the heat that infiltrates into the building from outside. This can be determined by subtracting the amount of heat generated by people and lighting from the internal heat gain.
(Indoor infiltration heat)
= 104.0 – (26.4 + 30.0) = 47.6 W/m^2

The Lossnay recuperates approximately 70% of the outdoor air load and saves on approximately 20% of the total load.

5.3 Ventilation load during heating

● Classification of heating load

	Class	
(a)	Indoor heat loss	Heat lost from walls (q_{WS}) Heat lost from glass (q_{GS}) Heat loss from conduction & convection (q_{GS}) Accumulated heat load in walls (q_{SS})
(b)	Outdoor air load	Sensible heat (q_{FS}) Latent heat (q_{FL})

During heating, the heat generated by people and electrical equipment in the room can be subtracted from the heating load. However, as the warming up time at the start of heating is short, this generated heat may be ignored in some cases.

Percentage of load

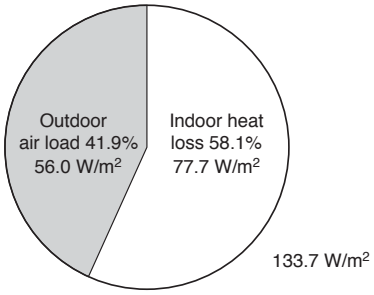

Type of load	Load
Outdoor air load	56.0 W/m^2
Internal heat	77.7 W/m^2
Total	133.7 W/m^2

Conditions: Middle floor of a general office building facing south.

Internal heat loss

In terms of load classification, the internal heat loss is the value of the outdoor air load subtracted from the approximate heating load.

Internal heat loss = 133.7 W/m^2 – 56.0 W/m^2 = 77.7 W/m^2

Heating load per unit area

When the outdoor air volume per person is 25 m^3/h, and the number of persons per 1 m^2 is 0.2 persons, the approximate heating load will be approximately 133.7 W/m^2.

● Outdoor air load

Air conditions <Standard design air conditions in Tokyo>

		Dry bulb temp.	Relative humidity	Wet bulb temp.	Enthalpy	Enthalpy difference
Heating	Outdoor air	0 °C	50%	–3 °C	5.0 kJ/kg	33.5 kJ/kg
	Indoors	20 °C	50%	13.7 °C	38.5 kJ/kg	

When the load per 1 m^2 of floor area with a ventilation volume of 25 m^3/h·person is calculated with the above air conditions, the following is obtained:

Outdoor air (ventilation) load = 1.2 kg/m^3 × 0.2 persons/m^2 × 25 m^3/h·person × 33.5 kJ/kg = 201.0 kJ/h·m^2 (56 W/m^2)

The Lossnay recuperates approximately 70% of the outdoor air load and saves on approximately 30% of the total load.

CHAPTER 2
Lossnay Construction and Principle

1. Construction and Features of Lossnay

● Lossnay construction

The Lossnay is constructed so that the exhaust air passage from the indoor side to the outdoor side (RA → EA) and the fresh air passage from the outdoor side to the indoor side (OA → SA) cross. The Lossnay heat recovery unit (Lossnay Core) is installed at this cross point, and recovers the heat by conduction through the separating medium between these airflows. This enables the heat loss during exhaust to be greatly reduced.

* RA : Return Air
EA : Exhaust Air
OA : Outdoor Air
SA : Supply Air

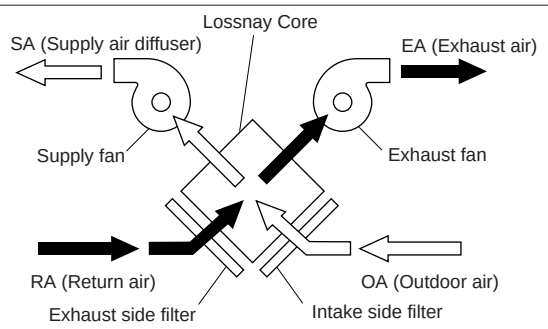

Note: The dust inlet and outlet are linear in the actual product.

Main Features of Lossnay

(1) Cooling and heating maintenance fees are saved while ventilating.
(2) The capacity and performance of the air conditioner can be reduced.
(3) Dehumidifying during summer, and humidifying during winter is possible.
(4) Comfortable ventilation is possible, (the outdoor air being adjusted to the room temperature.)
(5) Effective sound-proofing.

2. Construction and Principle of Core

● Simple construction

The Lossnay Core is a cross-flow total heat recovery unit constructed of plates and fins made of treated paper.
The fresh air and exhaust air passages are totally separated allowing the fresh air to be introduced without mixing with the exhaust air.

● Principle

The Lossnay Core uses the heat transfer properties and moisture permeability of the treated paper. Total heat (sensible heat plus latent heat) is transferred from the stale exhaust air to the fresh air being introduced into the system when they pass through the Lossnay. Try this simple experiment. Roll a piece of paper into a tube and blow through it. Your hand holding the paper will immediately feel warm. If cold air is blown through the tube, your hand will immediately feel cool. Lossnay is a total heat exchanger that utilizes these special properties of paper.

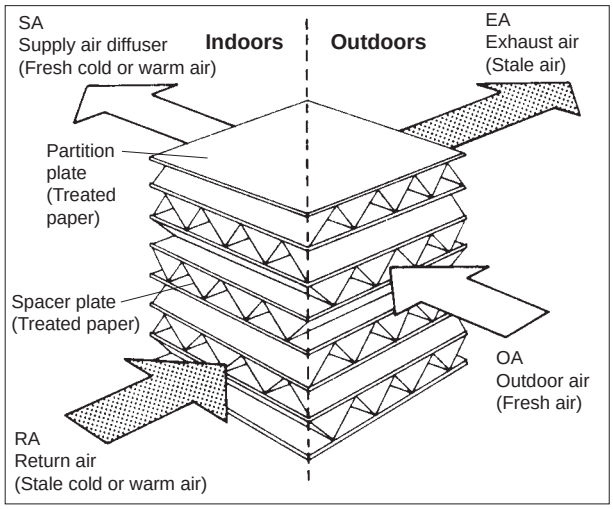

● Treated paper

The paper partition plates are treated with special chemicals so that the Lossnay Core is an appropriate heat recovery unit for the ventilator. This paper differs from ordinary paper, and has the following unique properties.

(1) The paper is incombustible and is strong.
(2) The paper has selective hydroscopicity and moisture permeability that permits the passage of water vapor only (including some water-soluble gases).
(3) The paper has gas barrier properties that does not pass gases such as CO_2.

Hyper Core

The Hyper Core that utilizes the world's thinnest* 25 μm ultra-thin film imperforate paper has been developed to further reduce gas transfer and to improve humidity exchange efficiency. The Hyper Core is mounted to the LGX-RX4.
(* As of January 22, 2004, in the case of a high moisture permeable material used for total heat exchange elements)

A comparison of the ordinary paper and the Lossnay Core plates is as shown in the table.

Ordinary paper	
Water vapor is transferred, but gas elements that are easily dissolved in water such as CO_2, NO_2 are also transferred. ↓ The contaminated air passes through the plates during ventilation and returns to the room.	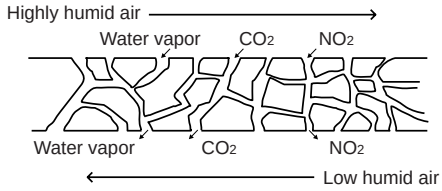
Treated paper	
Water vapor is transferred, but gas elements such as CO_2, NO_2 are not transferred. ↓ The contaminated air does not almost return to the room when ventilated.	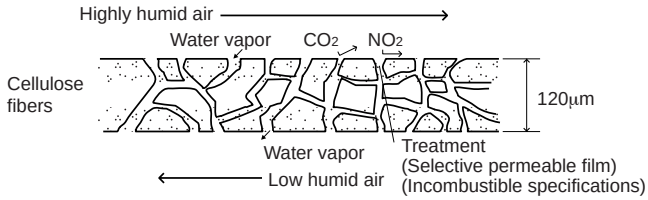
Hyper core	
The water vapor transfer rate has increased with further reduction of gas transfer. ↓ The rate at which the contaminated air returns to the room has been reduced to less than 1%*, and the total heat exchange performance has also been improved. (* Based on data measured by Mitsubishi using a single core unit)	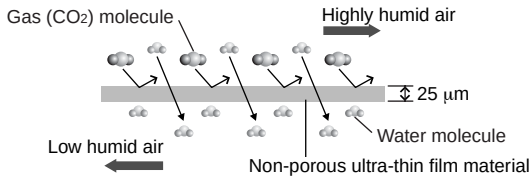

● Total heat recovery mechanism

Sensible heat and latent heat

The heat that enters and leaves in accordance with changing temperature (rise or drop) is called sensible heat. The heat that enters and leaves due to the changes in a matter's physical properties (evaporation, condensation) is called latent heat.

(1) Temperature (sensible heat) recovery

1) Heat conduction and heat passage is performed through a partition plate from the high temperature to low temperature side.
2) As shown on the right, the heat recovery efficiency is affected by the resistance of the boundary layer, and for the Lossnay there is little difference when compared to materials such as copper or aluminium which also have high thermal conductivity.

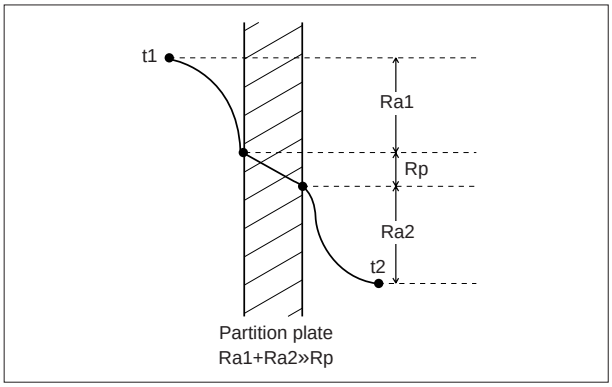

Heat resistance coefficients

	Treated paper	Cu	Al
Ra_1	10	10	10
Rp	1	0.00036	0.0006
Ra_2	10	10	10
Total	21	20.00036	20.0006

(2) Humidity (latent heat) recovery

- Water vapor is moved through the partition plate from the high humidity to low humidity side by means of the differential pressure in the vapor.

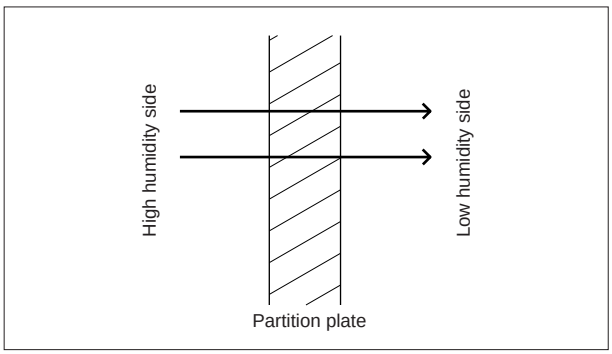

3. Calculation of the Total Heat Recovery Efficiency

The Lossnay Core's heat recovery efficiency can be considered using the following three transfer rates:

(1) Temperature (sensible heat) recovery efficiency

(2) Humidity (latent heat) recovery efficiency

(3) Enthalpy (total heat) recovery efficiency

The heat recovery effect can be calculated if two of the above efficiencies is known. (The temperature and enthalpy efficiencies are indicated in the applicable catalogue.)

- Each recovery efficiency can be calculated with the formulas given below.
- When the supply air volume and exhaust air volume are equal, the heat recovery efficiencies on the supply and exhaust sides are the same.
- When the supply air volume and exhaust air volume are not equal, the total heat recovery efficiency is low if the exhaust volume is lower, and high if the exhaust volume is higher.
  Refer to the Heat Recovery Efficiency Correction Curve in the applicable catalogue for more details.

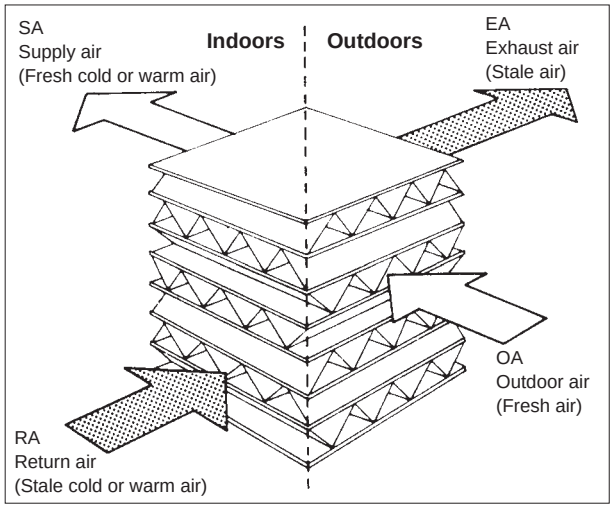

Item	Formula
Temperature recovery efficiency (%)	$\eta t = \frac{t(OA) - t(SA)}{t(OA) - t(RA)} \times 100$
Enthalpy recovery efficiency (%)	$\eta i = \frac{i(OA) - i(SA)}{i(OA) - i(RA)} \times 100$

η: Efficiency (%)

t : Dry bulb temperature (°C)

i : Enthalpy (kJ/kg)

Calculation of air conditions after passing through Lossnay

If the Lossnay heat recovery efficiency and the conditions of the room and outdoor air are known, the conditions of the air entering the room and the air exhausted outdoors can be determined with the following formulas.

	Supply side	Exhaust side
Temperature	$t_{SA} = t_{OA} - (t_{OA} - t_{RA}) \cdot \eta t$	$t_{EA} = t_{RA} + (t_{OA} - t_{RA}) \cdot \eta t$
Enthalpy	$i_{SA} = i_{OA} - (i_{OA} - i_{RA}) \cdot \eta i$	$i_{EA} = i_{RA} + (i_{OA} - i_{RA}) \cdot \eta i$

4. What is a Psychrometric Chart?

The chart which shows the properties of humid air is called a psychrometric chart. The psychrometric chart can be used to find the (1) Dry bulb temperature, (2) Wet bulb temperature, (3) Absolute humidity, (4) Relative humidity, (5) Dew point and (6) Enthalpy (total heat) of a certain air condition. If two of these values are known beforehand, the other values can be found with this chart. The way that the air will change when it is heated, cooled, humidified or dehumidified can also be seen easily on the chart.

(1) Dry bulb temperature t (°C)

Generally referred to as standard temperature this is measured with a dry bulb thermometer (conventional thermometer). The obtained value is the dry bulb temperature.

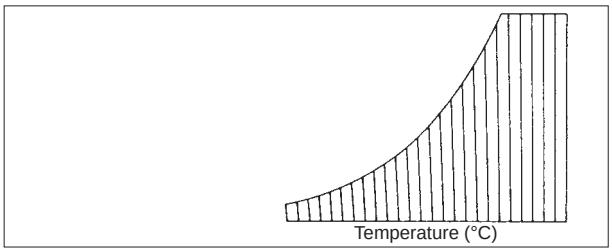

(2) Wet bulb temperature t' (°C)

When a dry bulb thermometer's heat sensing section is wrapped in a piece of wet gauze and an ample air flow (3 m/s or more) is applied, the heat applied to the wet bulb by the air and the heat of the water vapor that evaporates from the wet bulb will balance at an equal state. The temperature indicated at this time is called the wet bulb temperature.

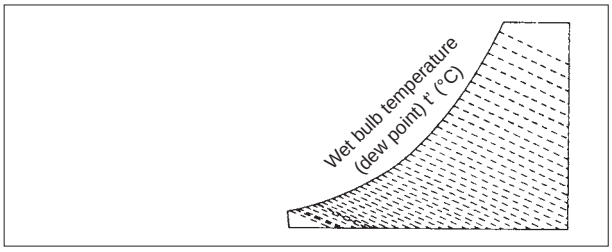

(3) Absolute humidity x (kg/kg')

The weight (kg) of the water vapor that corresponds to the weight (kg') of the dry air in the humid air is called the absolute humidity.

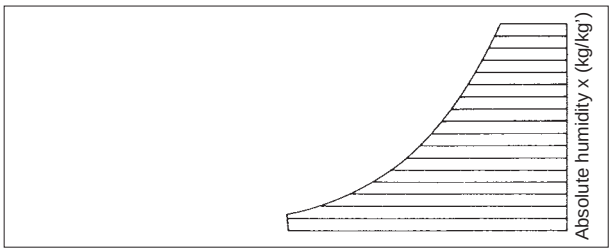

(4) Relative humidity φ (%)

The ratio of the water vapor pressure Pw in the humid air and the water vapor pressure Pws in the saturated air at the same temperature is called the relative humidity. This is obtained with the following formula:

$\varphi R = Pw/Pws \times 100$

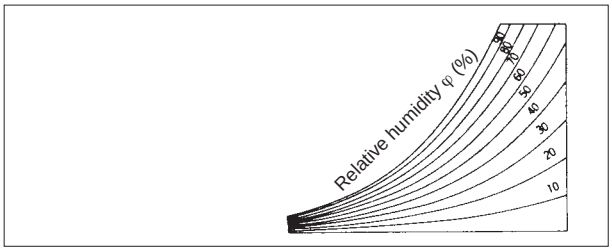

(5) Dew point t" (°C)

The water content in the air will start to condense when air is cooled.

The dry bulb temperature at this time is called the dew point.

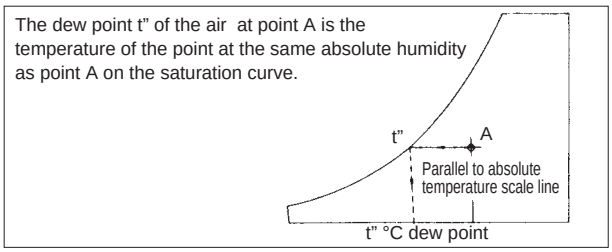

(6) Enthalpy i (kJ/kg)

Physical matter has a set heat when it is at a certain temperature and state. This retained heat is called the enthalpy, with dry air at 0 °C being set at 0.

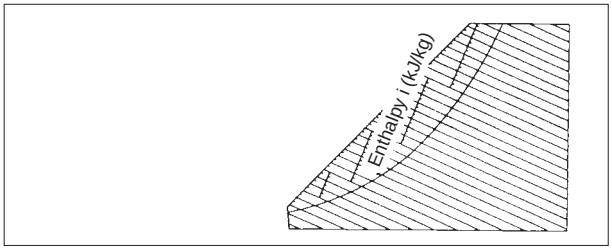

5. Calculation of Lossnay Heat Recovery

The following figure shows the conditions of various air states when fresh air is introduced through the Lossnay Core. If a conventional sensible heat recovery unit is used alone and is assumed to have the same heat recovery efficiency as Lossnay, the condition of the air supplied to the room is expressed by point A in the figure. This point shows that the air is very humid in summer and very dry in winter.
The air supplied to the room with Lossnay is indicated by point S in the figure. The air is precooled and dehumidified in the summer and preheated and humidified in the winter before it is introduced to the room.

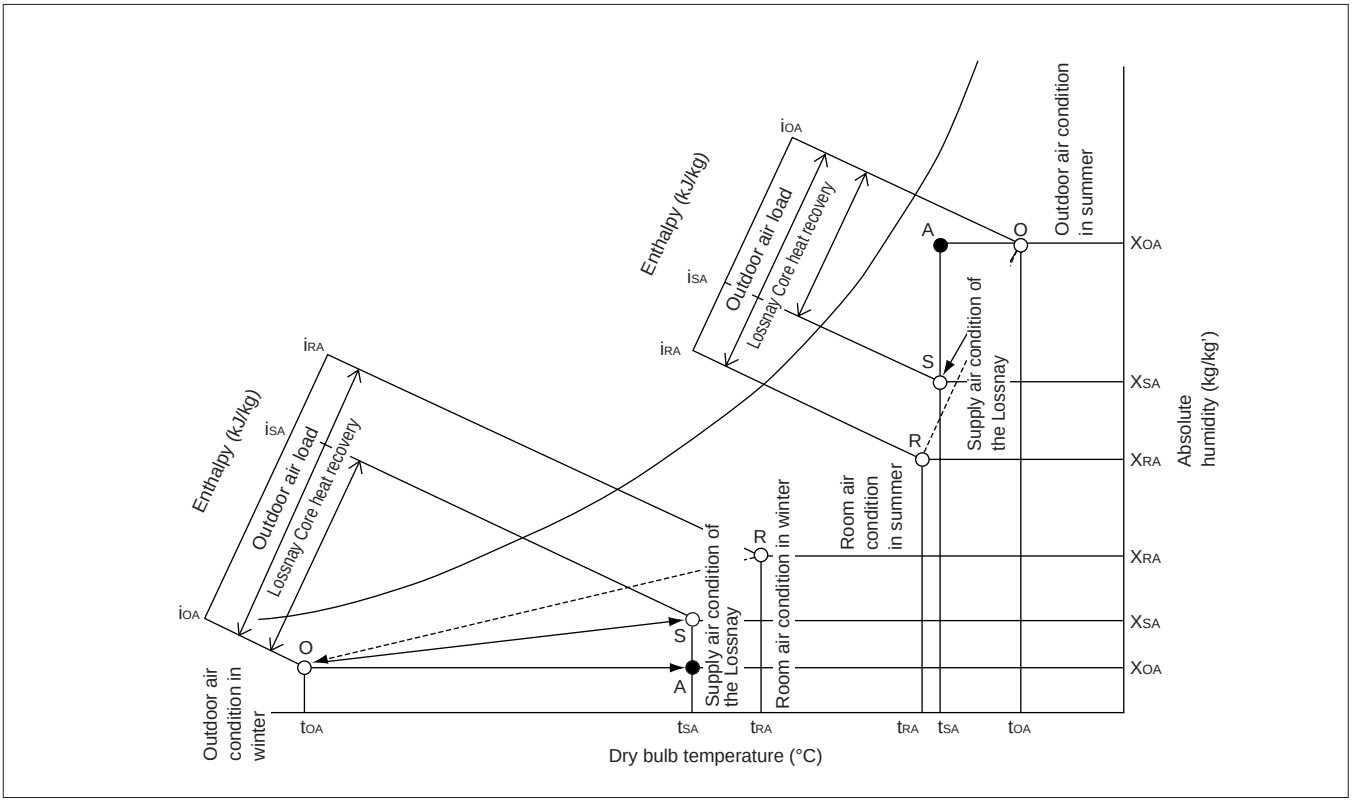

The quantity of heat recovered by using the Lossnay Core can be calculated with the following formula.

Total heat recovered: $q_T = \gamma \cdot Q \cdot (i_{OA} - i_{SA})$ [W]

$= \gamma \cdot Q \cdot (i_{OA} - i_{RA}) \times \eta i$

Where γ = Specific weight of air under standard conditions 1.2 (kg/m^3)
Q = Treated air volume (m^3/h)
t = Temperature (°C)
x = Absolute humidity (kg/kg')
i = Enthalpy (kJ/kg)
η = Heat recovery efficiency (%)

● Suffix meanings
OA : Outdoor air
RA : Return air
SA : Supply air

CHAPTER 3
General Technical Considerations

1. Lossnay Heat Recovery Effect

1.1 Comparison of outdoor air load of various ventilators

Examples of formulas to compare the heat recovered and outdoor air load when ventilating with the Lossnay (total heat recovery unit), sensible heat recovery ventilation (sensible HRV) and conventional ventilators are shown below.

(1) Cooling during summer

Conditions

- Model LGH-100R type (at 50Hz, high speed)
- Ventilation rate: 1000 m^3/h (specific gravity of air ρ = 1.2 kg/m^3)

- Heat recovery efficiency table (%) (For summer)

	Lossnay	Sensible HRV	Conventional ventilator
Temperature (sensible heat)	79	79	–
Enthalpy (total heat)	67	19*	–

* Calculated volume under below conditions.

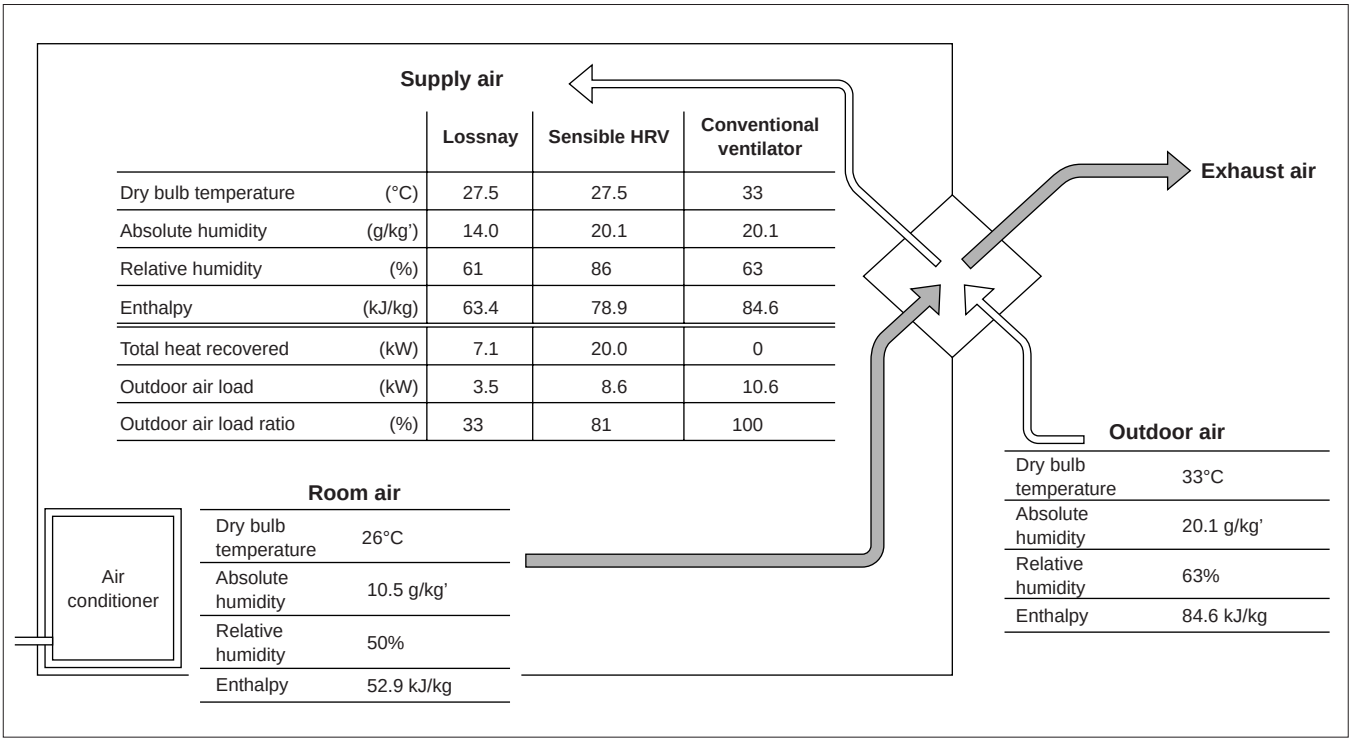

		Lossnay	Sensible HRV	Conventional ventilator
Dry bulb temperature	(°C)	27.5	27.5	33
Absolute humidity	(g/kg')	14.0	20.1	20.1
Relative humidity	(%)	61	86	63
Enthalpy	(kJ/kg)	63.4	78.9	84.6
Total heat recovered	(kW)	7.1	20.0	0
Outdoor air load	(kW)	3.5	8.6	10.6
Outdoor air load ratio	(%)	33	81	100

Outdoor air	
Dry bulb temperature	33°C
Absolute humidity	20.1 g/kg'
Relative humidity	63%
Enthalpy	84.6 kJ/kg

Room air	
Dry bulb temperature	26°C
Absolute humidity	10.5 g/kg'
Relative humidity	50%
Enthalpy	52.9 kJ/kg

Calculation example

- Lossnay
  (Supply air diffuser temperature) t_{SA} = 33°C – (33°C – 26°C) × 0.79 = 27.5°C
  (Supply air diffuser enthalpy) h_{SA} = 84.6 – (84.6 – 52.9) × 0.67 = 63.4 kJ/kg
  Heat recovered (84.6 – 63.4) × 1.2 × 1,000 = 25,440 kJ/h = 7.07 kW
  Outdoor air load (63.4 – 52.9) × 1.2 × 1,000 = 12,600 kJ/h = 3.5 kW
- Sensible HRV
  (Supply air diffuser temperature) t_{SA} = 78.9°C – (33°C – 26°C) × 0.79 = 27.5°C
  (Supply air diffuser enthalpy) h_{SA} = kJ/kg (from psychrometric chart)
  Heat recovered (85.0 – 78.9) × 1.2 × 1,000 = 7,320 kJ/kg = 2.03 kW
  Outdoor air load (78.9 – 53.2) × 1.2 × 1,000 = 30,840 kJ/h = 8.56 kW
  [Calculated enthalpy recovery efficiency 2.03 ÷ (2.03 + 8.56) × 100 = 19]
- Conventional ventilator
  If a conventional ventilator is used, the heat recovered will be 0 as the supply air diffuser is equal to the outdoor air.
  The outdoor air load is:
  (84.6 – 52.9) × 1.2 × 1,000 = 38,040 kJ/h = 10.6 kW

Summer conditions

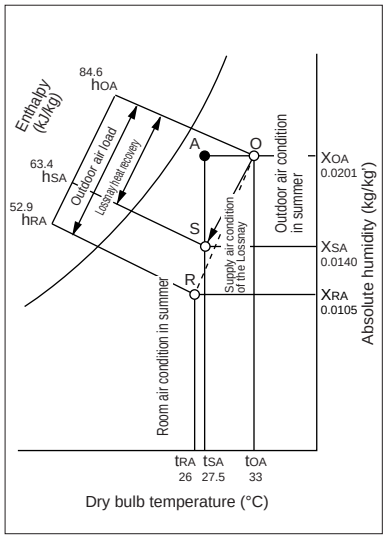

(2) Heating during winter

Conditions:

- Model LGH-100R type (at 50Hz, high speed)
- Ventilation rate: 1000 m^3/h (Specific gravity of air ρ = 1.2 kg/m^3)

- Heat recovery efficiency table (%) (For winter)

	Lossnay	Sensible HRV	Conventional ventilator
Temperature (sensible heat)	79	79	–
Enthalpy (total heat)	71	47*	–

* Calculated volume under below conditions.

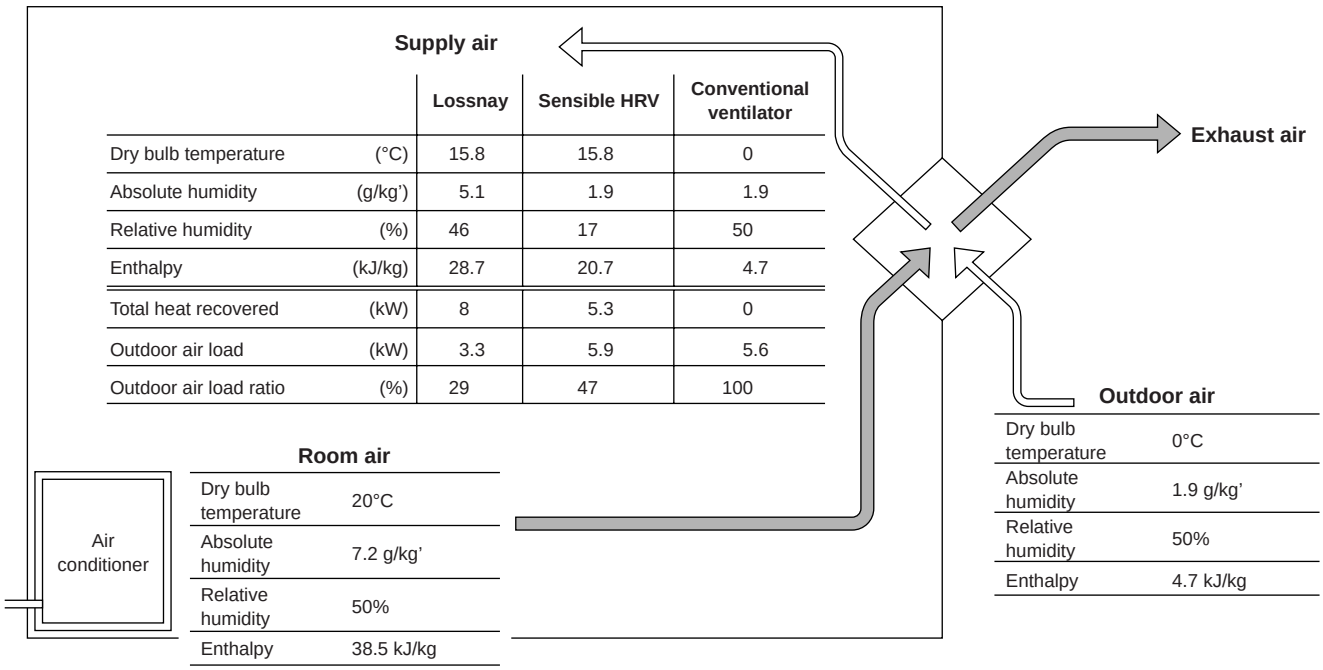

		Lossnay	Sensible HRV	Conventional ventilator
Dry bulb temperature	(°C)	15.8	15.8	0
Absolute humidity	(g/kg')	5.1	1.9	1.9
Relative humidity	(%)	46	17	50
Enthalpy	(kJ/kg)	28.7	20.7	4.7
Total heat recovered	(kW)	8	5.3	0
Outdoor air load	(kW)	3.3	5.9	5.6
Outdoor air load ratio	(%)	29	47	100

Room air	
Dry bulb temperature	20°C
Absolute humidity	7.2 g/kg'
Relative humidity	50%
Enthalpy	38.5 kJ/kg

Outdoor air	
Dry bulb temperature	0°C
Absolute humidity	1.9 g/kg'
Relative humidity	50%
Enthalpy	4.7 kJ/kg

Calculation example

- Lossnay
  (Supply air diffuser temperature) t_{SA} = (20°C – 0°C) × 0.79 + 0°C = 15.8°C
  (Supply air diffuser enthalpy) h_{SA} = (38.5 – 4.7) × 0.71 + 4.7
  = 28.7 kJ/kg
  Heat recovered (28.7 – 4.7) × 1.2 × 1,000
  = 28,800 kJ/h = 8.0 kW
  Outdoor air load (38.5 – 28.7) × 1.2 × 1,000
  = 11,760 kJ/h = 3.3 kW
- Sensible HRV
  (Supply air diffuser temperature) t_{SA} = (20°C – 0°C) × 0.79 + 0°C = 15.8°C
  (Supply air diffuser enthalpy) h_{SA} = 20.7 kJ/kg
  (from psychrometric chart)
  Heat recovered (20.7 – 4.7) × 1.2 × 1,000
  = 19,200 kJ/h = 5.3 kW
  Outdoor air load (38.5 – 20.7) × 1.2 × 1,000
  = 21,360 kJ/h = 5.9 kW
  [Calculated enthalpy recovery efficiency 5.3 ÷ (5.3 + 5.9) × 100 = 47]
- Conventional ventilator
  If a conventional ventilator is used, the supply air diffuser is the same as the outdoor air and the exhaust is the same as the room air.
  Thus the heat recovered is 0 kcal and the outdoor air load is (38.5 – 4.7) × 1.2 × 1,000 = 40,560 kJ/h = 11.3 kW

Winter conditions

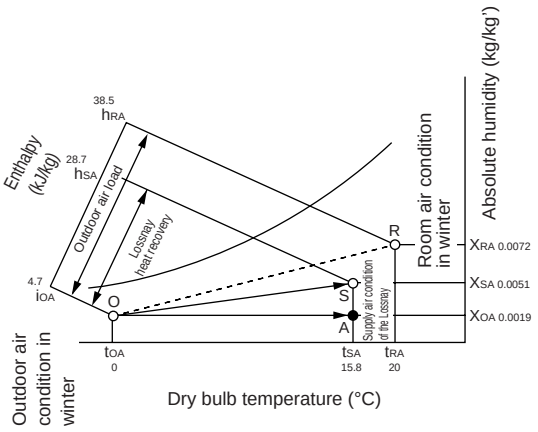

2. Example Heat Recovery Calculation

(1) Setting of conditions
(Note: Tokyo Power, industrial power 6 kV supply)

	Units	When Heating	When Cooling
Operation time	(h/yr)	10h/day × 26 days/mo. × 5 mo./yr. = 1,300 h/yr	10h/day × 26 days/mo. × 4 mo./yr. = 1,040 h/yr
Electricity fee	(yen/kWh)	16.22	17.84
Capacity per 1 kW of electricity	(kW/kW)	3.1	2.6
Energy unit cost	(yen/kWh)	16.22/3.1 = 5.23	17.84/2.6 = 6.86

● Return air volume (RA) = 8,000 m^3/Hr ● Outdoor air volume (OA) = 8,000 m^3/Hr ● Air volume ratio (RA/OA) = 1.0
● Air conditions

Season	Winter heating						Summer cooling					
Item	Dry bulb temp. DB [°C]	Wet bulb temp. WB [°C]	Relative humidity RH [%]	Absolute humidity × [kg/kg (DA)]	Enthalpy h [kJ/kg (DA)]	Mark in page 25	Dry bulb temp. DB [°C]	Wet bulb temp. WB [°C]	Relative humidity RH [%]	Absolute humidity × [kg/kg (DA)]	Enthalpy h [kJ/kg (DA)]	Mark in page 25
Outdoors	0	–2.7	50	0.0018	4.7	①	33	27.1	63	0.0202	85.0 (20.3)	③
Indoors	20	13.8	50	0.0072	38.5	②	26	18.7	50	0.0105	53.0 (12.7)	④

(2) Selection of Lossnay model (select from treatment air volume catalogue)
● Model name: LGH-100RX4 × 8 unit
● Processing air volume per unit RA = 8,000 m^3/Hr, OA = 8,000 m^3/Hr, Air volume ratio (RA/OA) = 1.0
● Heat recovery efficiency : Heat recovery efficiency = 79%, Enthalpy recovery efficiency (cooling) = 67%, Enthalpy recovery efficiency (heating) = 71%
● Static pressure loss (unit-type) RA = 100 Pa, OA = 100 Pa (Note: Each motors are High notch)
● Power consumption (pack-type) = 440W × 8 unit = 3.52 kW

(3) State of indoor supply air

	Heating	Cooling
Temperature [°C]	= { 20 (Indoor temperature) – 0 (outdoor air temperature)} × 0.79 (heat recovery efficiency) + 0 (outdoor air temperature) = 15.8	= 33 (Outdoor air temperature) – { 33 (outdoor air temperature) – 26 (indoor temperature)} × 0.79 (heat recovery efficiency) = 27.5
Enthalpy [kJ/kg (DA)]	= {38.5 (Indoor enthalpy) – 4.7 (outdoor air enthalpy)} × 0.71 (enthalpy recovery efficiency) + 4.7(outdoor air enthalpy) = 28.7	= 85 (Outdoor air enthalpy) – { 85 (outdoor air enthalpy) – 53 (indoor enthalpy)} × 0.67 (enthalpy recovery efficiency) = 63.6
Numerical value obtained from above equation and psychometric chart	• Dry-bulb temperature = 15.8 °C • Wet-bulb temperature = 9.9 °C • Relative humidity = 46% • Absolute humidity = 0.005 kg/kg (DA) • Enthalpy = 28.7 kJ/kg (DA) (page 25, ⑤)	• Dry-bulb temperature = 27.5 °C • Wet-bulb temperature = 21.8 °C • Relative humidity = 61% • Absolute humidity = 0.014 kg/kg (DA) • Enthalpy = 63.3 kJ/kg (DA) (page 25, ⑥)

(4) Outdoor air load and heat recovered

	Heating	Cooling
Fresh air load without Lossnay (q_1)	= 1.2 (Air specific gravity) × 8,000 (outdoor air volume) × { 38.5 (indoor enthalpy) – 4.7 (outdoor air enthalpy) } = 324,480 kJ/h = 90.1 kW	= 1.2 (Air specific gravity) × 8,000 (outdoor air volume) × { 85.0 (outdoor air enthalpy) – 53.2 (indoor enthalpy) } = 307,200 kJ/h = 85.3 kW
Outdoor air load with Lossnay (q_2)	= 90.1 (Outdoor air load) (q_1) × { 1 – 0.71 (enthalpy recovery efficiency)} = 26.1kW or = Air specific gravity × outdoor air volume × (indoor enthalpy – indoor blow enthalpy)	= 85.3 (Outdoor air load) (q_1) × { 1 – 0.67 (enthalpy recovery efficiency) } = 28.2 kW or = Air specific gravity × outdoor air volume × (indoor enthalpy – indoor blow enthalpy)
Heat recovered (q_3)	= $q_1 – q_2$ = 90.1 - 26.1 = 64.0 kW or = Outdoor air load (q_1) × enthalpy recovery efficiency	= $q_1 – q_2$ = 85.3 - 28.2 = 57.1 kW or = Outdoor air load (q_1) × enthalpy recovery efficiency
Outdoor air load (%)	• Outdoor air load = 90.1 kW = 100% • Outdoor air load with Lossnay = 26.1 kW = 29% • Heat recovered = 64.0 kW = 71%	• Outdoor air load =85.3 kW = 100% • Outdoor air load with Lossnay = 28.2 kW = 33% • Heat recovered = 57.1 kW = 67%

(5) Recovered money (power rates)

	Heating	Cooling
Yearly saved money	= Heat recovered: kW × Unit price yen/W × operation time Hr/year = 64.0 kW × 5.23 yen/kWh × (1,300hr/year) = 435,100 yen	= Heat recovered: kW × Unit price yen/W × operation time Hr/year = 57.1 kW × 6.86 yen × (1,040hr/year) = 407,374 yen
Remarks	If recovered heat is converted to electricity : heating = 64.0 kW/3.1 = 20.6 kW/h cooling = 57.1 kW/2.6 = 22.0 kW/h	

● Psychrometric chart for calculating Lossnay economical effect

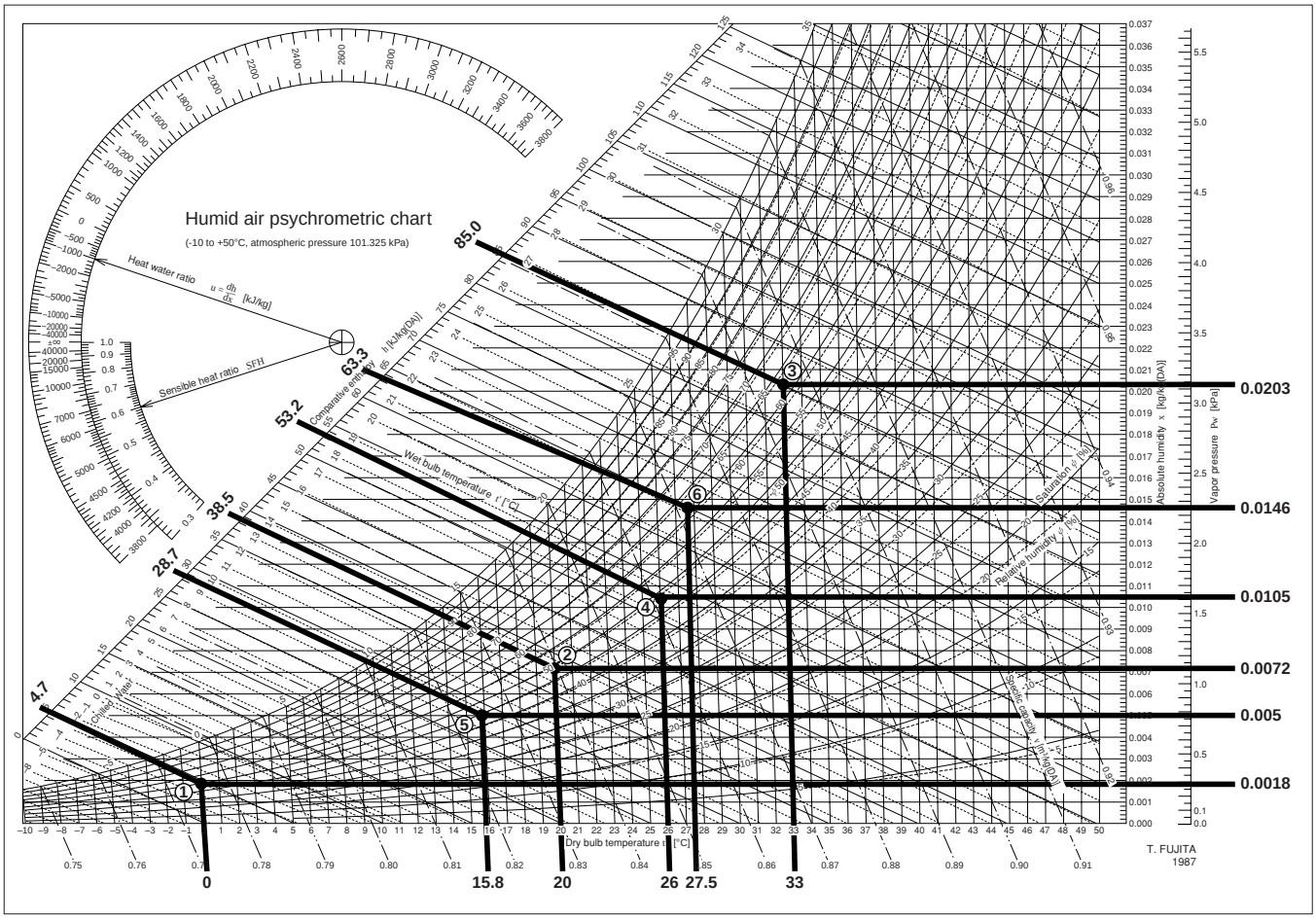

The following can be determined from the above calculation results:

- Saving of 64.0 kW of the heating load, and 57.1 kW of the cooling load is possible.
  The heat source equipment and related ventilator capacity that is equivalent to this saved amount can be reduced, thus the operation and maintenance costs can also be saved.
- Approximately 430,000 yen can be saved in operation and maintenance costs during heating and 400,000 yen during cooling, for a total savings of approximately 830,000 yen.

3. Calculation of Lossnay Economical Effects

The following is a sample questionnaire from which it is possible to assess the economical benefits of using the Lossnay in particular applications.

(1) Setting of conditions

- Return air volume (RA) = m^3/Hr
- Outdoor air volume (OA) = m^3/Hr
- Air volume ratio (RA/OA) =
- Air conditions

Season	Winter heating					Summer cooling				
Item	Dry bulb temp. DB [°C]	Wet bulb temp. WB [°C]	Relative humidity RH [%]	Absolute humidity × [kg/kg']	Enthalpy i kJ/kg (kcal/kg')	Dry bulb temp. DB [°C]	Wet bulb temp. WB [°C]	Relative humidity RH [%]	Absolute humidity × [kg/kg']	Enthalpy i kJ/kg (kcal/kg')
Outdoors										
Indoors										

- Operation time: Heating = hours/day × days/month × months/year = hours/year
  Cooling = hours/day × days/month × months/year = hours/year
- Energy: Heating = Type: Electricity Cost: yen/kWh
  Cooling = Type: Electricity Cost: yen/kWh
  Power rates: Winter: yen/kWh Summer: yen/kWh

(2) Selection of Lossnay model (select from treatment air volume catalog)

- Model name:
- Processing air volume per unit RA = m^3/Hr, OA = m^3, Air volume ratio (RA/OA) =
- Heat recovery efficiency : Heat recovery efficiency = %,
  Enthalpy recovery efficiency (cooling) = %,
  Enthalpy recovery efficiency (heating) = %
- Static pressure loss (unit-type) RA= Pa OA = Pa (Note: Each with filters)
- Power consumption (pack-type) = none because of unit type

(3) State of indoor blow air

	Heating	Cooling
Temperature [°C]	= (Indoor temperature – outdoor air temperature) × heat recovery efficiency + outdoor air temperature =	= Outdoor air temperature – (outdoor air temperature – indoor temperature) × heat recovery efficiency =
Enthalpy [kJ/kg]	= (Indoor enthalpy – outdoor air enthalpy) × enthalpy recovery efficiency + outdoor air enthalpy =	= Outdoor air enthalpy – (outdoor air enthalpy – indoor enthalpy) × enthalpy recovery efficiency =
Numerical value obtained from above equation and psychometric chart	● Dry-bulb temperature = °C ● Wet-bulb temperature = °C ● Relative humidity = % ● Absolute humidity = kg/kg' ● Enthalpy = kg/kg	● Dry-bulb temperature = °C ● Wet-bulb temperature = °C ● Relative humidity = % ● Absolute humidity = kg/kg' ● Enthalpy = kg/kg

(4) Outdoor air load and heat recovery

	Heating	Cooling
Fresh air load without Lossnay (q_1)	= Air specific gravity × outdoor air volume × (indoor enthalpy – outdoor air enthalpy) =	= Air specific gravity × outdoor air volume × (outdoor air enthalpy – indoor enthalpy) =
Outdoor air load with Lossnay (q_2)	= Outdoor air load (q_1) × (1 – enthalpy recovery efficiency) = or = Air specific gravity × outdoor air volume × (indoor enthalpy – indoor blow enthalpy)	= Outdoor air load (q_1) × (1 – enthalpy recovery efficiency) = or = Air specific gravity × fresh air volume × (indoor blow enthalpy – indoor enthalpy)
Heat recovery (q_3)	= q_1 – q_2 = – = or = Outdoor air load (q_1) × enthalpy recovery efficiency	= q_1 – q_2 = – = or = Outdoor air load (q_1) × enthalpy recovery efficiency
Outdoor air load (%)	● Outdoor air load = W = % ● Outdoor air load with Lossnay = W = % ● Heat recovered = W = %	● Outdoor air load = W = % ● Outdoor air load with Lossnay = W = % ● Heat recovered = W = %

(5) Recovered money (power rates)

	Heating	Cooling
Yearly saved money (yen)	= Heat recovered: kW × Unit price ¥/kWh × operation time Hr/year = kW × ¥/kWh × = Hr/year =	= Heat recovered: kW × Unit price ¥/kWh × operation time Hr/year = kW × ¥/kWh × = Hr/year =

4. Psychrometric Chart

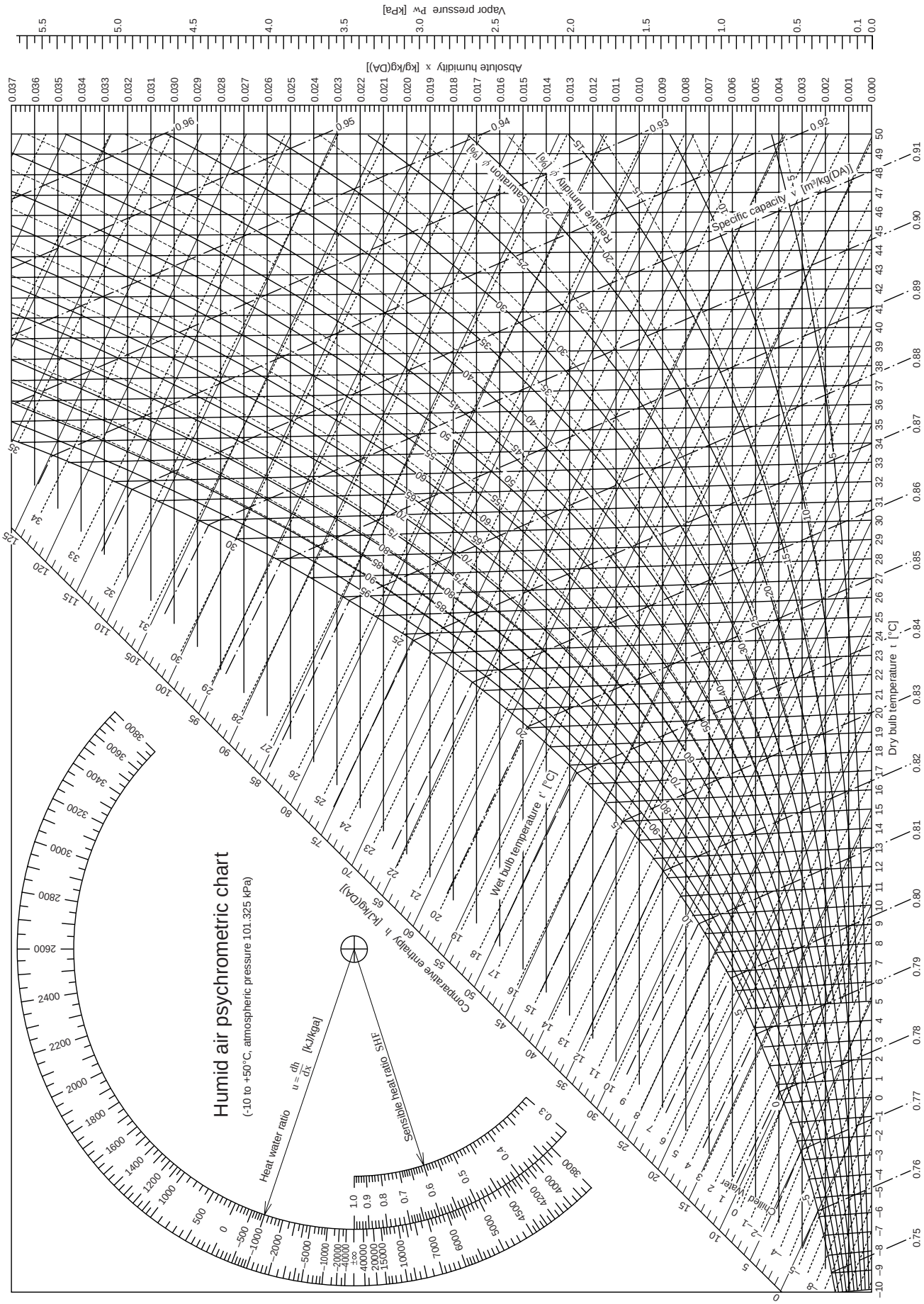

5. The Result of No Virus (phage) Cross Contamination for the Lossnay Core and Determining Resistance of the Lossnay Core to Molds

Test report

This document reports the result that there is no virus (phage) cross contamination for the Lossnay Core.

(1) Object

The present test was conducted to verify that there is no airborne virus (phage) cross contamination from the outlet air to the inlet air of the Lossnay Core in the heat exchange process.

(2) Client

Name: Mitsubishi Electric Corporation Nakatsugawa Works
Address: 1-3 Komaba-cho, Nakatsugawa-shi, Gifu, Japan

(3) Institution and Analyst

Name: Kitasato Research Center of Environmental Sciences
Address: 1-15-1 Kitasato, Sagamihara-shi, Kanagawa, Japan
Analyst: Microbiology Department
shunji Okuda, Noriko Shimasaki

(4) Test Period

December 22, 2004
(Test materials was operated by engineers of your company)

(5) Test Materials

New Lossnay core “Hyper Element*”

(6) Organism

1) Test virus

E.coli phage φX174 ATCC 13706-B

2) Host bacteria

Escherichia coli ATCC 13706

3) Host bacteria culture

Escherichia coli (explained in 2)) was inoculated into 0.5%
Nacl-added Nutrient Broth (Difco), and was cultivated overnight at 35℃.
The resultant medium containing approximately 10^9 CFU/ml of host becteria was used as host becterium solution.

4) Test virus solution

E.coli phage φX174 was mixed with host bacterium solution (explained in 3)) and cultivated. The resultant medium was filtrated by membrane filter owing to removal of Escherichia coli, and was diluted with sterile ion-exchanged water to obtain test virus solution of approximately 10^7 PFU/ml.

(7) Method

1) Outline

The test apparatus is schematically shown in Fig. 1. The air flow rate was 250m^3 /hr in the outlet and inlet ducts intersecting each other at the Lossnay Core. Air-sampling tubes were attached, with their openings against the air flow, at the each center of 4 sites, outlet duct upstream (location A) and downstream (location B) and inlet duct upstream (location C) and downstream (location D) of the Lossnay Core.
The test was performed as follows: Test virus solution was sprayed from the upstream side of the outlet duct, and a specified quantity of air was then simultaneously sampled with midget impingers at 4 sites, locations A, B, C, and D around the Lossnay Core to count the number of airborne viruses contained in the air.

2) Spray of test virus solution

The test virus was sprayed in the outlet duct at a pressure of 1kgf/cm^2 while supplying compressed air from the compressor into the nebulizer containing the test virus solution.

3) Sampling of airborne viruses

Airborne viruses were collected using the midget impinger as described below. Air in the duct was aspirated at a rate of 5 liters per minute for 4 minutes. Hence, a total of 20 liters of air was collected in 25 ml of sterile ion-exchanged water in the midget impinger.

4) Method for counting the number of viruses

Ion-exchanged water in the midget impingers, which possibly contained airborne viruses (E.coli phages), was used as the sample stock solution, and its 10-fold serial dilutions were then made. 0.2 ml of the stock solution and each dilution were mixed with 0.2 ml of host becterium solution of about 10^9 CFU/ml, and then mixed with 4.0 ml of soft agar for top layer. The mixture was then layered on the surface of 0.5% NaCl-added Nutrient Agar. The resultant medium was incubated for 18 hr at 35℃. The number of plaques formed was counted to determine the number of airborne viruses per 20L of sampled air.

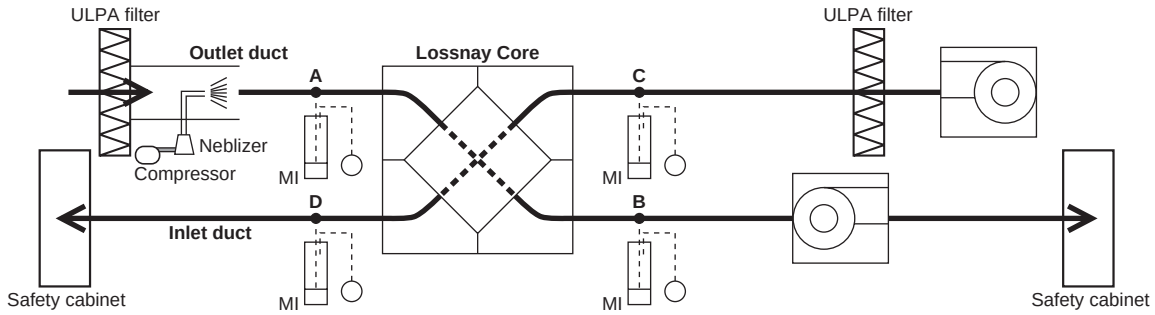

* MI : Midget impinger

(8) Test result

The concentration of test virus solution was 1.2X10^7 PFU/ml.
The result of test is shown in table-1.

(9) Consideration

The test virus was E. coli phage φX174 with a small viral particle diameter (about 20 nm).
Test viruses were detected at locations A and B on the outlet side, from which the test virus solution was sprayed. In contrast, no test viruses were detected in 20L of sampled air at location C (in the air filtered by the ULPA filter) or location D (in the air crossed in the Lossnay Core) on the inlet side. Therefore, it can be concluded that airborne viruses in the outlet side will not cross the dividers (specially processed paper) of the Lossnay Core to the opposite inlet side even when heat is exchanged there.

Teble-1 Airborne virus counts on each location
Test virus : E.coli phage φX174 ATCC 13706-B

Test No.	Location A	Location B	Location C	Location D
1	3.1 X 10^2	2.8 X 10^2	< 1	< 1
2	4.4 X 10^2	1.2 X 10^2	< 1	< 1
3	1.9 X 10^2	6.2 X 10	< 1	< 1
Average	3.1 X 10^2	1.5 X 10^2	< 1	< 1

(Unit of measurement: PFU/20L-air)

* Hyper Element is LGH-RX4 series core.

Note: Above test concluded that airborn viruses which is about 0.02μm will not cross the paper of Hyper Element.
In the other test used Bacillus Subtillis and Serratia Marcescers which are about 0.5 - 0.3μm, their Bacteria do not cross the core paper for LU-500 and LGH-40ES.

6. Flame-proofing Properties of Lossnay Core

The Lossnay Core satisfied all requirements of Paragraph 4-3 of the Fire Prevention Law Enforcement Rules.
Details of the tests carried out are as seen below.

Notation format 2 - (3)

Notification of flame-proofing property test
(For flame-proof materials and related items)

Flame-proofing committee test No., B-80028
April 17, 1980

Messrs.: Mitsubishi Electrical Corporation

Japan Flame-proofing committee

The results of the test, requested on April 8, 1980, are as follows.

Whereas

Part name	Air filter Total heat recovery unit	**Material, Mixture ratio, Organization, Fan number, Density, Weight (g/m²)**	Specially treated paper: (Partition (white) : Thickness 0.2 mm) (Filler block (blue) : Thickness 0.2 mm) Adhesive agent: Vinyl acetate (Specific gravity ratio 2.6%) 600 g/m²
Product name (Brand)	Lossnay (ventilation fan) B		

Test No.	Test item	Residual flame (sec.)	Residual dust (sec.)	Carbonized area (cm²)
2-min. heating	1 (Vertical)	0.	4.1	35.4
	2 (Vertical)	0.	7.7	38.2
	3 (Horizontal)	0.	1.4	35.9
6-sec. heating after igniting	1 (Vertical)	0.	0.	26.3
	2 (Horizontal)	0.	0.	20.3

Test item / Test No.	Carbonization length (cm)	No. of flame contact times (times)
1		
2		
3		
4		
5		

Evaluation	Passing

Remarks

Test method
Application of Paragraph 4-3 Standards of Fire Prevention Laws Enforcement Rules (Ministry of Home Affairs Ordinance No. 6, 1961) (Thick cloth test)

Passing standards
Residual flame : 5 sec. or less
Residual dust : 20 sec. or less
Carburized area : 40 cm² or less

Washing test

The Lossnay Core was also tested at the Japan Construction General Laboratories according to the fire retardancy test methods of thin materials for construction as set forth by JIS A 1322. The material was evaluated as Class 2 flame retardant. Details of the tests carried out are shown below.

Flame-proofing property test report

Messrs. Mitsubishi Electric Corp., Nakatsugawa Works

Acceptance No.	VF-93-11-(2)
Data of acceptance	September 7, 1993
Data of report	October 12, 1993

Japan Construction General Laboratories
5-8-1 Fujishirodai, Suita City 565
Tel: 06-872-0391
Hiorshi Wakabayashi Dr. of Engineering, Director

Applicant	**Company name**	Mitsubishi Electric Corp., Nakatsugawa Works					
	Address	1-3 Komanba-cho, Nakatsugawa, Gifu					
Specimen and test body	**Specimen type**	Single-face laminated corrugated board	**Product name**	Lossnay Core (Total heat recovery unit)			
	Material structure and cross-sectional diagram, etc.	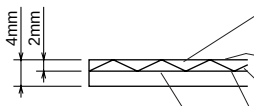 Single-face laminated corrugated board ... Thickness: 4 mm (Single-face corrugated board with 2 mm cell size laminated alternately at right angle) Partition (Liner paper) Flame-proof treated paper ... Thickness: 0.085 mm, Weight: 70 g/m^2 Adhesive agent ... Vinyl acetate resin ... Weight: 30 g/m^2 (Solid) Filler (Flute paper) ... Colored wood free paper ... Thickness: 0.093 mm, Weight: 79 g/m^2 Adhesive agent ... Vinyl acetate resin ... Weight: 30 g/m^2 (Solid) Partition (Liner paper) Flame-proof treated paper ... Thickness: 0.085 mm, Weight: 70 g/m^2					
	Test body size and thickness (mm)	300 (Long side) × 200 (Short side) × 4 (Thickness)					
	Test body direction	The longer side is the vertical side.					
Testing method	**Testing standards**	**Pre-treatment of test body**	**Heating time**	**Heating surface class and direction**			
	JIS A 1322 (45° Meckelian burner method)	Method A (drying method)	3 min.	The direction of which the corrugated board fold was vertical was set as the front of the heating surface.			
Test results	**Test date**	October 5, 1993					
	Test position	**Residual frame (sec.)**	**Residual dust (sec.)**	**Carbonized length (Vertical x Horizontal) (cm)**	**Discoloration length (Vertical x Horizontal) (cm)**	**Remarks**	
	Class / **Direction** / **No.**						
	Front / Vertical / 1	0	0	8.2 × 4.7	18.7 × 7.3		
	Front / Vertical / 2	0	0	8.4 × 4.9	24.3 × 7.8	*1	
	Front / Vertical / 3	0	0	7.4 × 5.0	22.0 × 8.4		
Evaluation	The specimen conforms to Class 2 flame-proofing (heating time: 3 min.) according to the "Fire retardancy test methods of thin materials for construction" as set forth by JIS A 1322.						
Persons in charge of testing	Material Testing Laboratory Laboratory chief: Hiroshi Tamura, Technicians: Shigeru Fujikawa, Nobuaki Oohiro, Tetsuya Ogawa						

Note: Immediately after starting heating, the flame was ignited simultaneously with the generation of smoke. Penetration was observed approx. 2 min. 30 sec., after heating was started. There were no further changes.
In above test the Lossnay core material for LU and LGH-40ES type is used.
Hyper Element paper for LGH-RX4 series was tested at the Underwriters Laboratories Inc. according to the standard of UL94, Test for Flammability of Plastic Materials for Parts in Devices and Appliances, 1998.
The material was evaluated as per 5VA classified of flammability.

7. Lossnay Core's Soundproofing Properties Test

As the Lossnay Core is made of paper and the permeable holes are extremely small, the Core has outstanding soundproofing properties and is appropriate for ventilation in soundproof rooms.
For example, the exposed ceiling-type LGH-100RX3-E has soundproofing characteristics of 35.0dB with a center frequency of 500Hz. This means that a sound source of 84.4dB can be shielded to 49.4dB.

Soundproofing effect test results

	Test number	IVA-01-06
Client	**Name**	Mitsubishi Electric Corporation 1-3, Komaba-cho, Nakatsugawa-shi,
	Address	Gifu 508-8666, Japan
Test specimen	**Trade name**	LGH-100RX3-E
	Main composition	Air-to-Air Energy Recovery Ventilator
	Manufacture date	May. 18th, 2001
	Size (unit : mm)	W1231 × H398 × D1521 (ANNEXED DRAWINGS No.1,2 show details.)
	Note	Pipe joint in the sound receiving room side (Portion A in ANNEXED DRAWING No.1) had been filled with oil clay and then winded with onefold aluminum tape, sound insulation sheet and glass wool around duct successively.

Test method

Standard: Test method was determined according to JIS A 1416 : 1994 "Method for laboratory measurement of sound transmission loss" and Architectural Institute of Japan Standard "Measurement method on sound transmission loss of small building elements".

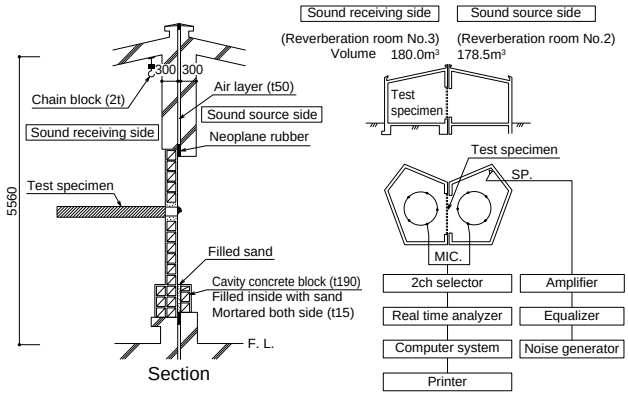

Fig. 1 Testing setup (unit : mm)

Test results

Date of test	May. 18th, 2001
Sound transmitting size	ϕ254 mm × 2
Air temperature, Relative humidity	22.0°C, 62%RH (Receiving room)

Center frequency (Hz)	Average sound pressure level (dB) Source room Ls	Receiving room Lr	Level difference D	Equivalent absorption area in receiving room A (m²)	Sound transmission loss TL (dB)	Revised sound transmission loss TLc (dB)
100	83.3	59.3	24.0	2.65	10	11
125	83.8	62.8	21.0	3.21	6	6
160	85.5	61.0	24.5	3.69	9	10
200	86.0	58.7	27.3	3.48	12	13
250	86.1	58.3	27.8	3.54	12	13
315	85.0	57.0	28.0	3.96	12	12
400	86.2	54.3	31.9	4.40	16	16
500	84.4	49.4	35.0	4.62	18	19
630	84.7	50.7	34.0	4.80	17	17
800	85.5	48.7	36.8	5.06	20	20
1000	87.0	47.7	39.3	5.58	22	22
1250	89.2	47.7	41.5	6.26	24	24
1600	89.3	47.4	41.9	7.03	23	23
2000	90.7	47.0	43.7	7.57	25	25
2500	92.8	48.2	44.6	8.62	25	25
3150	83.4	48.2	45.2	10.19	25	25
4000	95.0	48.8	46.2	12.42	25	25
5000	95.0	47.6	47.4	15.51	26	26

Note
1. The left graph shows level difference with (revised) sound transmission loss.
2. Page 4* shows method of calculating (revised) sound transmission loss.
3. Test specimen area (Sound transmitting area) is
   S = 0.10134m² (ϕ254mm × 2)
   for calculating (revised) sound transmission loss.
4. An arithmetic mean of revised sound transmission loss (1/3 octave, 125Hz - 4000Hz)....18.4dB

Test laboratory: Heat & Acoustics Laboratory, Building Physics Dept.
General Building Research Corporation of Japan
5-8-1 Fujishirodai, Suita-shi, Osaka 565-0873, Japan

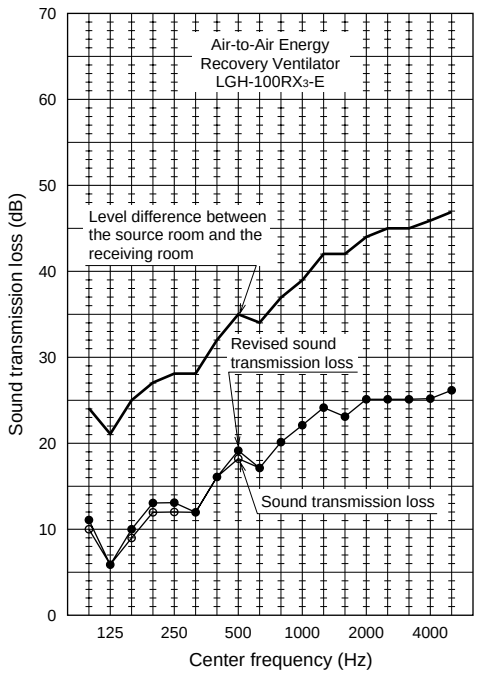

The persons in charge of the test: Iwao Kurahashi (Head)
Takao Waki (Section chief)
Mitsuo Morimoto (Section chief)

* Page 4 is in the certificate of this test.

8. Change in Lossnay Core Over Time

The following details show an example of a building that has installed the Lossnay units, from which it is possible to assess the change in the units over time.

8.1 Outline of building where Lossnay is installed

(1)	**Building name**	: Meiji Seimei, Nagoya Office/shop building 1-1 Shinsakae-machi Naka-ku, Nagoya
(2)	**No. of floors**	: 16 above ground, 2-storey penthouse, 4 basement floors
(3)	**Total floor space**	: 38,893 m^2
(4)	**Reference floor space**	: 1,388 m^2

8.2 Outline of installed ventilation equipment

(1)	**Air handling method**	: 4 fan coil units (perimeter zone) per floor
	Chilling unit	: Absorption-type 250 kT × 1 unit, turbo 250 kT × 2 units
	Gas direct heating/cooling boiler	: 340 kT, heating 1630 kW
(2)	**Ventilation method**	: Air - air total heat recovery unit “Lossnay” LS-200 × 18 units installed in penthouse. Outdoor air treatment volume 46,231 CMH, Exhaust air treatment volume 54,335 CMH.
		+
(3)	**Lossnay outline diagram**	: LS-200* (with four Lossnay Cores)

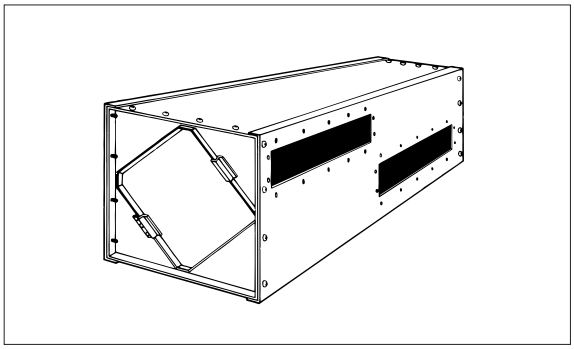

Lossnay duct system diagram

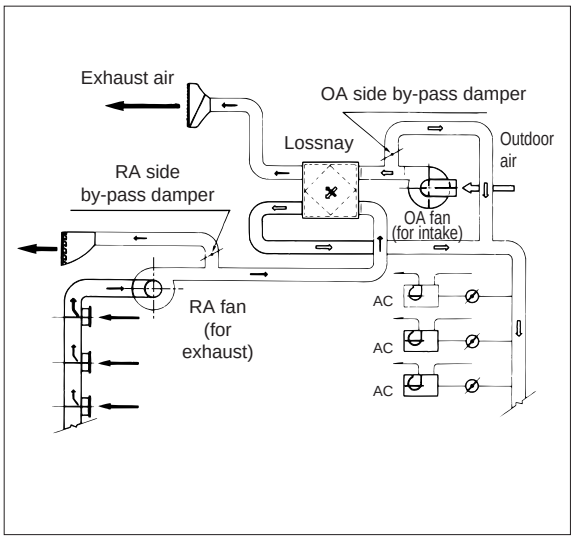

General diagram of penthouse Lossnay chamber

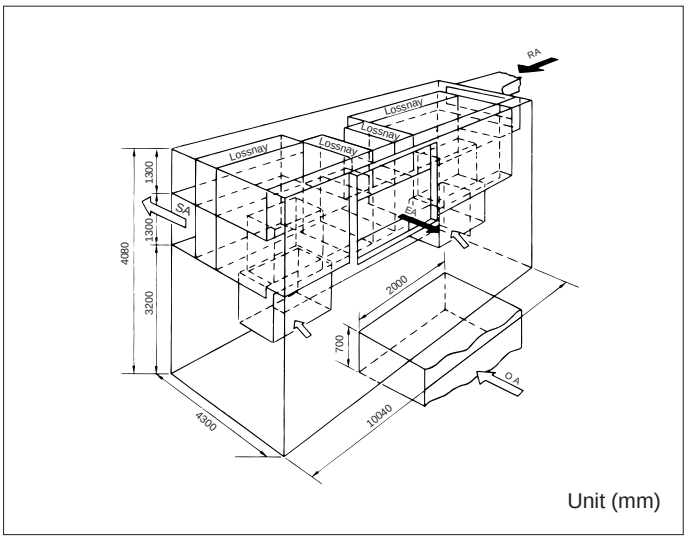

* Core pertition plate pitch is same as LGH-RX4-E series.
It is narrower than pitches of both LGH-40ES and LU-500.

8.3 Outline of Lossnay operation

(1)	**Start of operation**	: September 1972
	Start of daily operation	: 7:00 } Average daily operation 11 hours
	End of daily operation	: 18:00 } Average daily operation 11 hours
(2)	**Inspection after usage**	: November 1983
(3)	**Bypass operation month**	: Three months of April, May, June
(4)	**Total operation time**	: (134 – 33) months × 25 days/month × 11 hours/day = 27,775 hours

8.4 Characteristics in change of Lossnay Core over time

Two Lossnay Cores were removed from the 18 Lossnay LS-200 installed in the Meiji Seimei Building, and the static pressure loss and exchange efficiencies were measured. The comparison with the initial value is shown on the right. The appropriate air volume for one Lossnay Core is 500 m^3/hr, and the measurement point was ±200 m^3/hr of this value.

Characteristics in change of Lossnay Core over time

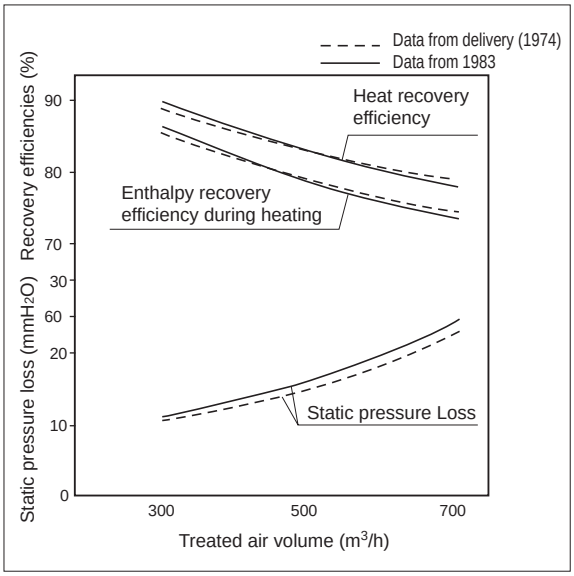

8.5 Conclusion

(1) Changes in the characteristics of the Lossnay Core after approximately eleven years of use and an estimated 28,000 operation hours were not found.

In numerical values, the static pressure loss was 150 to 160 Pa at 500 m^3/hr which was a 10 Pa increase, and the exchange efficiencies had decreased slightly at above 500 m^3/hr. However, this is considered to be insignificant and remained in the measurement error range.

(2) Looking at the appearance, the Core surface was black with dust, but there were no gaps, deformation or mold that would pose problems during practical use.

9. Comparison of Heat Recovery Techniques

The methods by which heat recovery devices can be categorised may be considered as follows:

Basic methods of total heat exchangersa

	Type	Method	Air flow	Country of development
Heat recovery principle	Static (Mitsubishi Lossnay)	Conductive transmission type	Cross-flow	Japan
	Rotary type	Heat accumulation/ humidity accumulation type	Counterflow	Sweden

9.1 Principle construction of rotary-type

- The rotary-type heat recovery unit is composed of a rotor that has a layered honeycomb structure made of kraft paper, drive motor and housing.
  A large quantity of moisture absorbent material (lithium chloride, etc.) is applied onto the rotor, and humidity is transferred. The rotor is rotated eight times a minute by the drive motor.

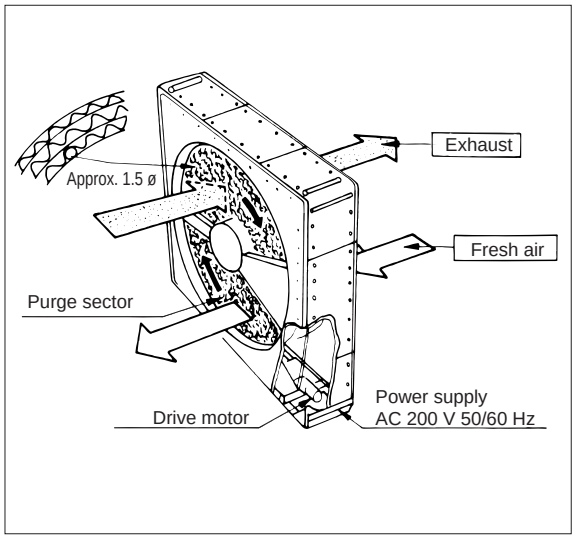

- The principle of this rotary-type is for example when cooling, the high temperature and high humidity fresh air passes through the rotor, with the heat and humidity being absorbed by the rotor. As the rotor is rotating, it moves into the exhaust air passage, and the heat and humidity is discharged to outdoors because the exhaust is cool and has a low humidity.
  The rotor rotates and returns to the fresh air passage to absorb the heat and humidity again.

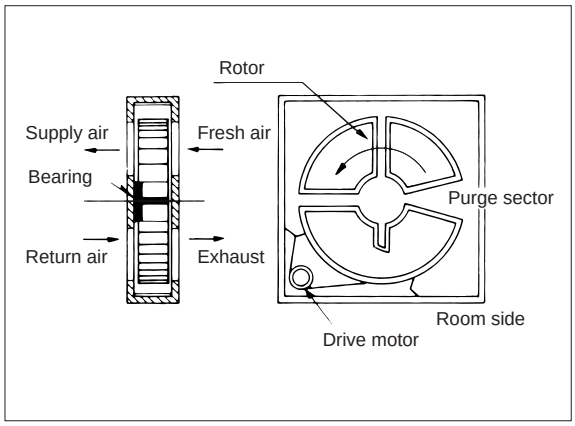

- Function of purge sector
  There are two separation plates (purge sector) in the front and back of the rotor to separate the flow of the air. As one of the plates is slightly shifted, part of the fresh air always flows into the exhaust air passage to prevent the exhaust air and fresh air from mixing. (A balanced pressure difference is required.)

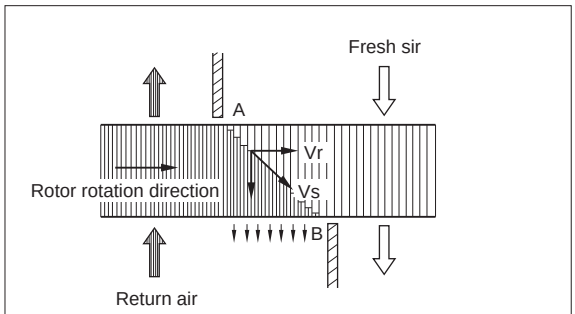

When a purge sector is mounted, the introduction of the exhaust air in the rotor to the air on the supply side can be prevented.
Vr: Rotor speed, Vs: Air speed in relief section

9.2 Comparison of static-type and rotary-type heat recovery units

Item	Static-type		Rotary-type	
Construction/ principle	<Conductive transmission-type: cross-flow> Static-type transmission total heat recovery unit with orthogonally layered honeycomb shaped treated paper formed into multiple layers. ● As the supply air and exhaust air pass through different passages (sequentially layered), the air passages are completely separated.		<Heat accumulation/humidity accumulation-type: counterflow> The rotor core is composed of honeycomb-shaped kraft paper, etc., to which a moisture absorbent is applied (lithium chloride, etc.). This rotor is rotated, and heat accumulation/humidity accumulation - heat discharge/humidity discharge of total heat exchange is performed by passing the exhaust and intake airs into a honeycomb passage. × Supply air and exhaust airs flow into the same air passage because of the rotary-type construction.	
Moving parts	● None Fixed core		× Used (rotor driven with belt by gear motor) Rotor core (8 rpm)	
Material quality	Treated paper		Treated paper, aluminum plates, etc.	
Mounting of prefilter	Required (periodic cleaning required)		Required (periodic cleaning required)	
Element clogging	● Occurs (state where dirt adheres onto element air passage surface. However, this is easily removed with a vacuum cleaner.)		× Occurs (Dust is smeared into element air passage filter.) (The dust adhered onto the core surface is smeared into the air passage by the purge sector packing. Thus, it cannot be removed easily and the air volume decreases.)	
Air leakage Gas transmission rate	Approximately 2.5% air leak at standard fan position. Leaks on the air supply side can be reduced to 0 by leaking the loss air volume (approx. 10%) on the exhaust side with the fan position to the core. ● Gas transmission (Ammonia : 28%, hydrogen sulfide : approx. 6.7%)		× Purged air volume occurs To prevent leakage of exhaust to the air intake side, a purge air volume (6 to 14%) leak is created to the exhaust side. Thus, there are problems in the purge sector operation conditions (pressure difference, speed), and the air volume balance must be balanced. × Gas transmission (Ammonia : 45-57%, hydrogen sulfide : approx. 3.2-4%)	
Bacteria transmission rate	● Low (As air intake/exhaust are separate, transmission is low.)		× High (As air intake/exhaust are the same, transmission is high.)	
Operation during off-seasons	Bypass circuit required (OK on one side of air intake and exhaust air outlet passage)		Bypass circuit required (Required on both air intake and exhaust air outlet sides) (In theory, operation is possible by stopping the rotation, but the core will over-absorb, causing drainage.)	
Maintenance	Core cleaning: More than once a year The core surface will clog with lint and dirt, but cleaning is easy with a vacuum cleaner. Only the two core air passage intakes need to be cleaned.		Core cleaning: Once every one to two years Cleaning is difficult as dust is smeared into core with the packing. × Gear motor for rotor drive : Periodic inspection × Rotor bearing, rotor drive belt : Periodic inspection	
Life	Core: Semi-permanent (10 years or more) (The static-type does not break.)		Core: Semi-permanent (10 years or more) (Periodic replacement is required according to the rotor bearings and core clogging.) × Rotor drive belt : Periodic replacement × Drive motor, rotor bearing : Periodic replacement	
Model system and comparison	o Available from small to large. o Characteristic design of small and medium models possible. Large models are easy to match to machine room layout.	Example LU-1605	Large type only × Small models are difficult to design because of the rotor magnitude.	Example EV-1500
Standard treatment air volume	40 to 25,000 m^3/h	8,000 m^3/h	o 100 to 63,000 m^3/h	8,000 m^3/h
Enthalpy recovery efficiency		Temperature:77% Enthalpy Heating : 71% Cooling : 66%		74%
Pressure loss		170 Pa		180 Pa
Installation space (W × D × H) (mm)	Effective for small to medium capacity (Layout is free according to combination.)	600 × 2100 × 2540	Large capacity models are effective	320 × 1700 × 1700

Measure of useability ● High o Average × Poor

CHAPTER 4
Characteristics

1. How to Read the LGH Series Lossnay Characteristic Curves

1.1 Obtaining characteristics from static pressure loss

(1) Static pressure loss from straight pipe duct length (at required air volume)

(2) Static pressure loss at curved section (at required air volume)

(3) Static pressure loss of related parts (at required air volume)

⇩

Total static pressure loss

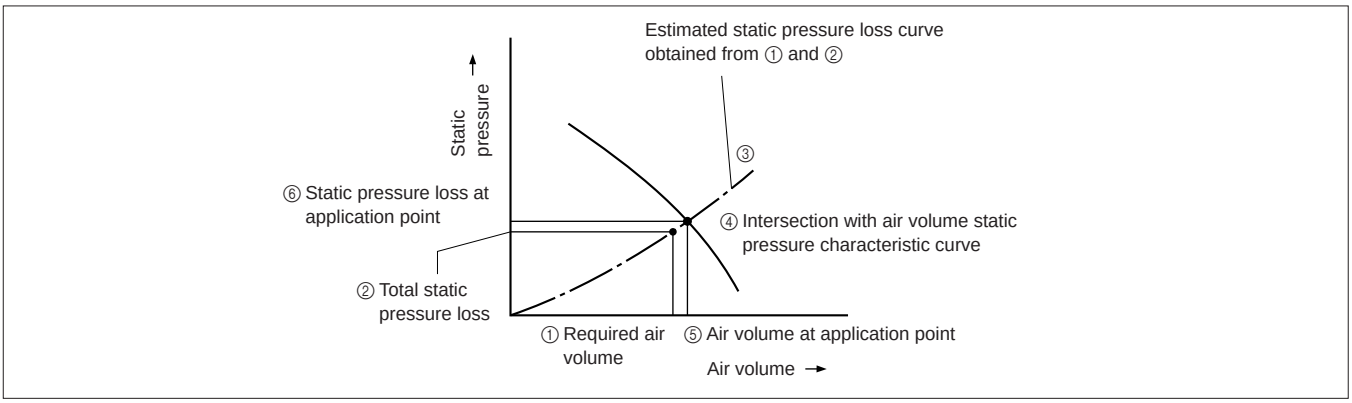

2. Calculating the Static Pressure Loss

2.1 How to read the air volume - static pressure curve

It is important to know the amount of static pressure loss applied onto the Lossnay when using parts such as ducts for the air distribution. If the static pressure increases, the air volume will decrease. The air volume - static pressure curve (Q-H curve) shows this percentage. A static pressure of 19.6 Pa is applied on to point A, and the air volume is 500 m^3/h. The duct resistivity curve shows how the static pressure is applied when a duct is connected to the Lossnay. Thus, the L = 9.97 m duct resistivity curve in the diagram is the curve that shows how the static pressure is applied when a 10 m duct is connected. The intersecting point A with the Lossnay Q-H curve is the operation point.
This calculation should be done for both SA and EA.

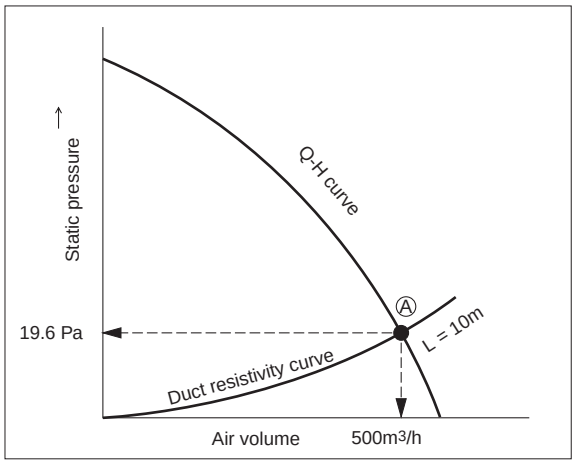

Duct resistivity curve

The duct resistivity curve shows how much static pressure a duct will apply on the Lossnay, as explained above.

In general, the interrelation between the duct and static pressure is as follows:

Duct	Static pressure
When duct is long	Increases
If length is the same but the air volume increases	Increases
If the duct diameter is narrow	Increases
If the duct inner surface is rough (such as a spiral)	Increases

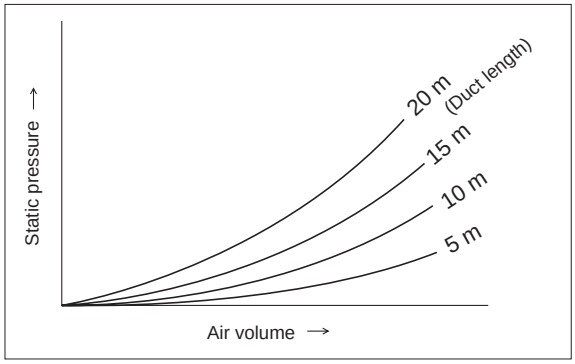

Calculation of duct pressure loss for 150,200RX4

Hypothetical curve for one of upper and lower units is 1/2 of 150,200RX4 specification curve on the horizontal line of some static pressure.
Calculating each unit, use this curve as the specification curve.
Specification curve for 200 and 150RX4 type are combine of indoor and outdoor duct pressure loss in the condition that 2 of upper and lower units are same specification.

* Duct length of specification curve is not sum of each doct of upper and lower unit.

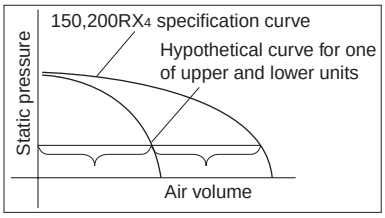

Reference

● The pressure loss caused by the outdoor air is as follows:

Pressure loss caused by outdoor air (Pa)

$$= \frac{r}{2} \times V^2 = \frac{1.2}{2} \times (\text{velocity})^2$$

$\begin{cases} r : \text{Air weight } 1.2\ kg/m^3 \\ v : \text{Velocity (m/s)} \end{cases}$

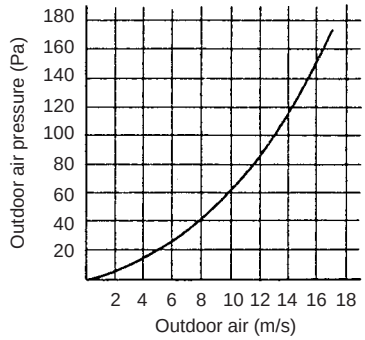

2.2 Calculation of duct pressure loss

When selecting a model that is to be used with a duct, calculate the volumes according to Tables 3, 4, 5 and 6, and then select the unit according to the air volume and static pressure curve.

(1) Calculation of a rectangular pipe

Table 3 Conversion table from rectangular pipe to circular pipe

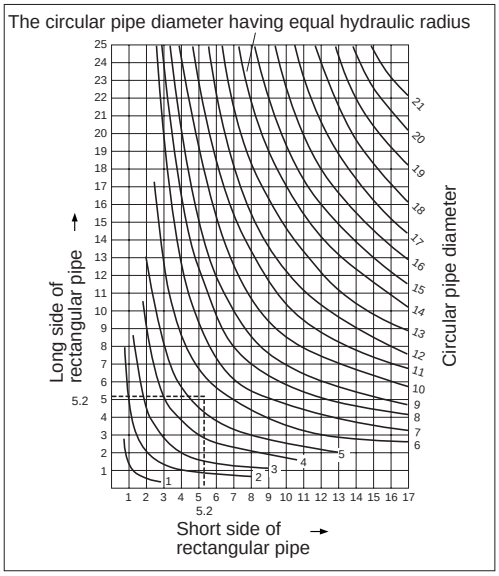

How to read Table 3

Select the unit as per each duct. In the above example, the □ 520 rectangular pipe only goes as far as 17. Thus, the long side, short side and converted circular pipe values are all multiplied by 100. The point 560 where the two lines cross is hence the value where the rectangular pipe equates to the circular pipe.

(2) How to obtain the duct resistivity

Table 4 Circular duct friction loss (steel plate duct, inner roughness ε = 0.18 mm)

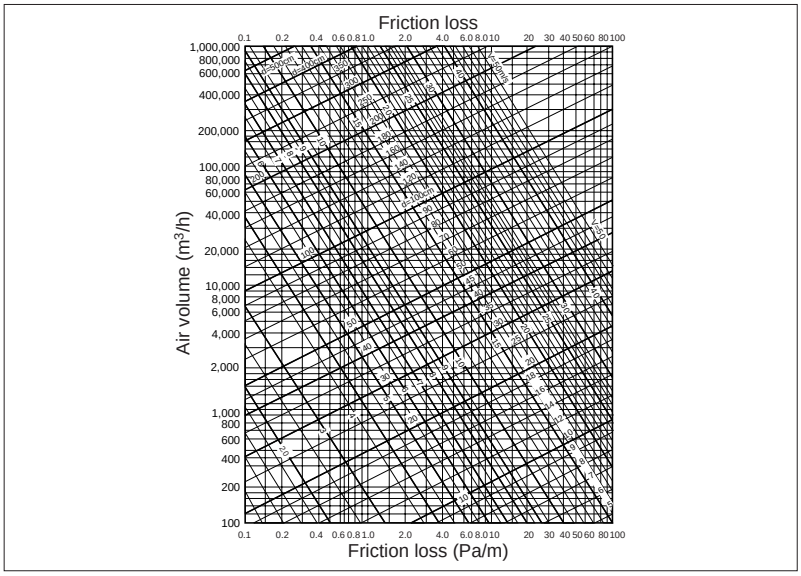

How to read Table 4

The point where the line of the circular duct diameter (leftward slanting line) and of the required air velocity (horizontal line) intersect is the pressure loss per 1 m of duct.
The value of the slanted line to the lower right of the intersecting point is the average velocity.

(Outline of Table 4)

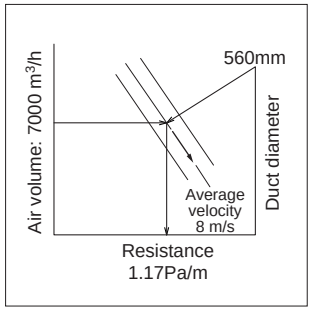

The figure obtained from Table 4 must then be corrected for duct type at various velocities. This can be done using Table 5 below.

Table 5 Friction coefficient compensation table

Duct inner surface	Example	Average velocity (m/sec)			
		5	10	15	20
Very rough surface	Concrete finish	1.7	1.8	1.85	1.9
Rough	Mortar finish	1.3	1.35	1.35	1.37
Very smooth	Drawn steel pipe Vinyl pipe	0.92	0.85	0.82	0.8

An alternative, more detailed method for determining the pressure loss in duct work is as shown using the following formula:

Circular pipe section pressure loss

$$\Delta p = \lambda \cdot \frac{\ell}{d} \cdot \frac{\rho}{2} \cdot v^2 \text{ (Pa)}$$

$$\Delta p = C \cdot \frac{\rho}{2} \cdot v^2 \text{ (Pa)}$$
$$= 0.6\, C \cdot v^2$$

λ : Friction resistance coefficient (smooth pipe 0.025)
C : Local loss coefficient (refer to Table 6)
d : Duct diameter (m)
ℓ : Duct length (m)
ρ : Air weight (1.2 kg/m^2)
v : Wind velocity (m/s)

(3) How to calculate curved sections

Table 6 List of pressure losses in each duct section

No.	Duct section	Outline diagram	Conditions		C value	Length of equivalent circular pipe
1	90° Smooth Elbow	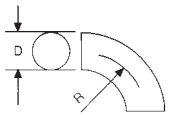	R/D = 0.5		0.73	43D
			= 0.75		0.38	23D
			= 1.0		0.26	15D
			= 1.5		0.17	10D
			= 2.0		0.15	9D
2	Rectangular Radius Elbow	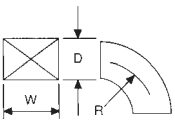	W/D	R/D		
			0.5	0.5	1.30	79D
				0.75	0.47	29D
				1.0	0.28	17D
				1.5	0.18	11D
			1-3	0.5	0.95	57D
				0.75	0.33	20D
				1.0	0.20	12D
				1.5	0.13	8D
3	Rectangular Vaned Radius Elbow	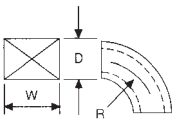	No. of vanes	R/D		
			1	0.5	0.70	42D
				0.75	0.16	10D
				1.0	0.13	8D
				1.5	0.12	7D
			2	0.5	0.45	27D
				0.75	0.12	7D
				1.0	0.10	6D
				1.5	0.15	9D
4	90° Miter Elbow	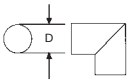			0.87	53D
5	Rectangular Square Square Elbow	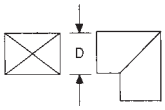			1.25	76D
6	Rectangular Vaned Square Elbow	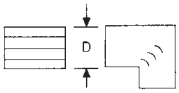			0.35	21D
7	Rectangular Vaned Square Junction	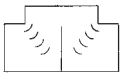	Same loss as circular duct. Velocity is based on inlet.			
8	Rectangular Vaned Radius Junction					
9	45° Smooth Elbow	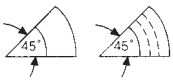	With or without vanes, rectangular or circular		1/2 times value for similar 90°	
10	Expansion	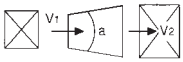	a = 5°		0.17	10D
			10°		0.28	17D
			20°		0.45	27D
			30°		0.59	36D
			40°		0.73	43D
			Loss is for $hV_1 - hV_2$			
11	Contraction	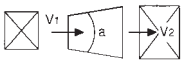	a = 30°		0.02	1D
			45°		0.04	2D
			60°		0.07	4D
			Loss is for V_2			

No.	Duct section	Outline diagram	Conditions		C value	Length of equivalent circular pipe
12	Transformer	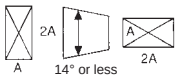			0.15	9D
13	Abrupt Entrance				0.50	30D
14	Abrupt Exit				1.0	60D
15	Bellmouth Entrance				0.03	2D
16	Bellmouth Exit				1.0	60D
17	Re-entrant inlet	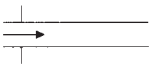			0.85	51D
18	Sharp edge round orifice	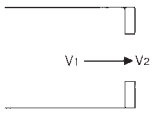	V_1/V_2 = 0		2.8	170D
			0.25		2.4	140D
			0.50		1.9	110D
			0.75		1.5	90D
			1		1.0	60D
			Loss is for V_2			
19	Pipe inlet (with circular hood)	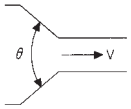	β	20°	0.02	
				40°	0.03	
				60°	0.05	
				90°	0.11	
				120°	0.20	
20	Pipe inlet (with rectangular hood)	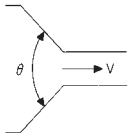	β	20°	0.03	
				40°	0.08	
				50°	0.12	
				90°	0.19	
				120°	0.27	
21	Abrupt contraction	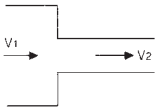	V_1/V_2 = 0		0.5	30D
			0.25		0.45	27D
			0.50		0.32	19D
			0.75		0.18	11D
			Loss is for V_2			
22	Abrupt expansion	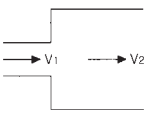	V_1/V_2 = 0		1.0	60D
			0.20		0.64	39D
			0.40		0.36	22D
			0.60		0.16	9D
			0.80		0.04	2D
			Loss is for V_1			
23	Suction inlet (punched narrow plate)	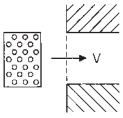	Free are ratio	0.2	35	
				0.4	7.6	
				0.6	3.0	
				0.8	1.2	

3. How to Obtain Efficiency from Characteristic Curves

3.1 Commercial-use Lossnay

How to read Commercial-use Lossnay characteristic curve

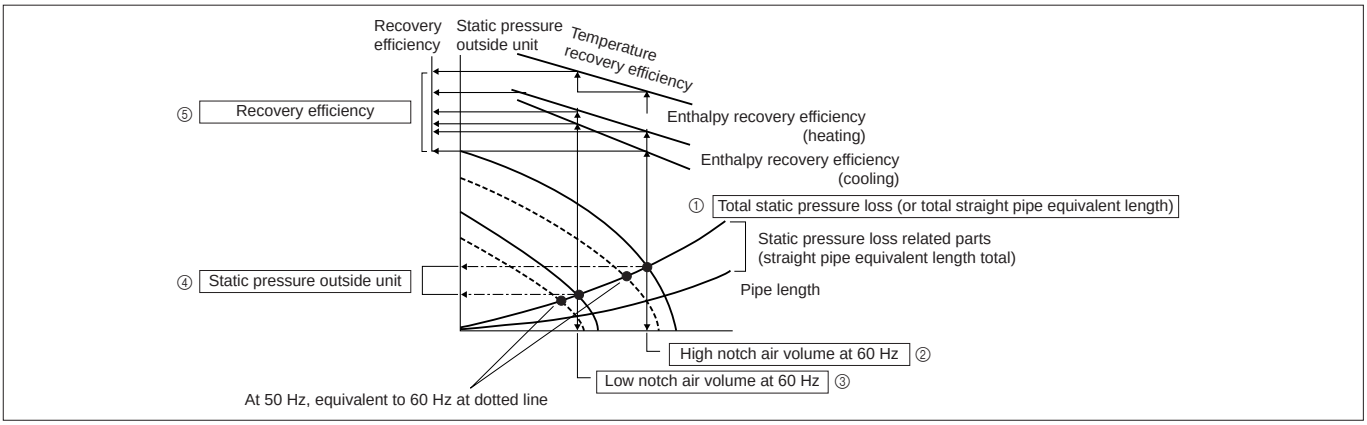

- Obtaining the efficiency when supply air and exhaust air volumes differ
  The efficiency obtained from the intake side air value in each characteristic curve can be corrected with the air volume ratio in the chart on the right.
  If the intake side and exhaust side duct lengths differ greatly or if a differential air volume is required, obtain the intake side efficiency from the chart on the right.

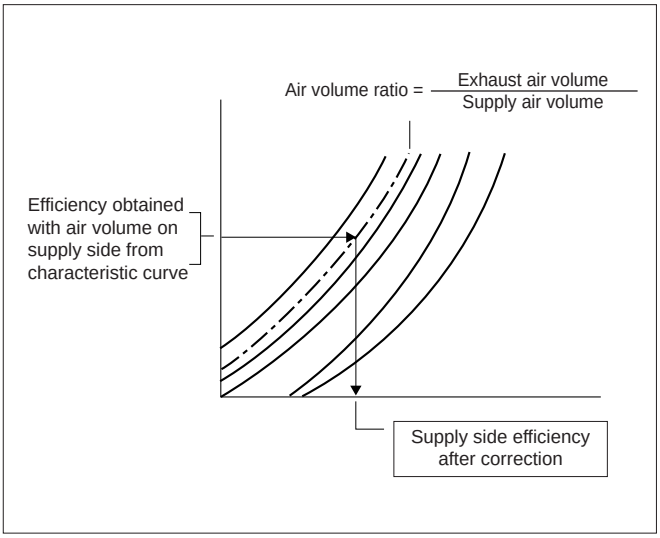

Heat recovery efficiency correction curve

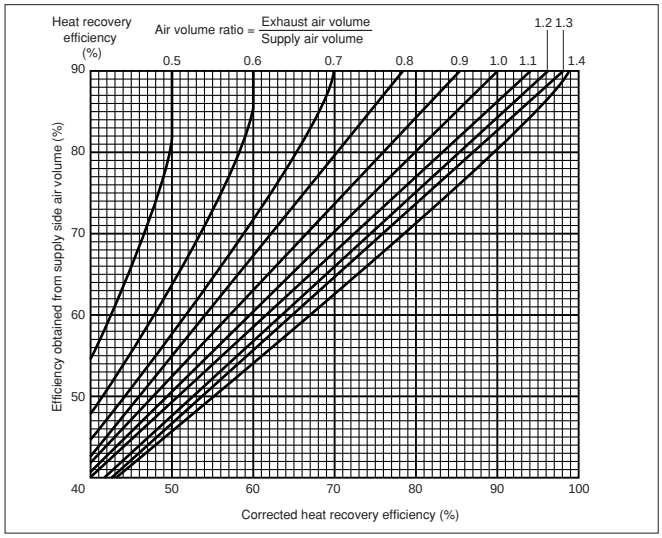

3.2 Building-use Lossnay

How to read LU type Lossnay characteristic curves

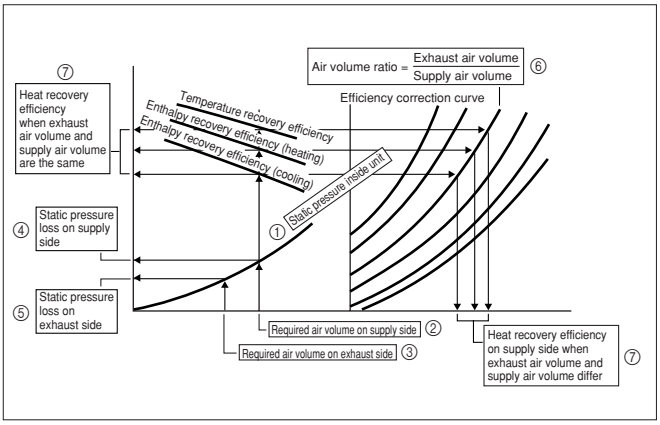

4. Sound

Sound is emitted when any object is excited causing it to vibrate. The object that vibrates is called the sound source, and the energy that is generated at the source is transmitted through the air to the human ear. Humans can hear the sound only when the ear drum vibrates.

4.1 Sound level and auditory perception

Sound level is the sound wave energy that passes through a unit area in a unit time, and is expressed in dB (decibel) units.
The sound heard by the human ear differs according to the strength of the sound and the frequency, and the relation to the pure tone sound is as shown on the right. The vertical line shows the strength of the sound and the horizontal line shows the frequency. For frequencies between 20 Hz to 15,000 Hz which can be felt by the human ear, the strength of sound that can be felt that is equivalent to a 1,000 Hz sound is obtained for each frequency. The point where these points cross is the sound level curve, and a sound pressure level numerical value of 1,000 Hz is expressed. These are called units of phons. For example, the point on the 60 curve is perceived as 60 phons.

- On average, the human senses a sound that is less than 1,000 Hz as rather weak, and a sound between 2,000 to 5,000 Hz as strong.

ISO audio perception curve

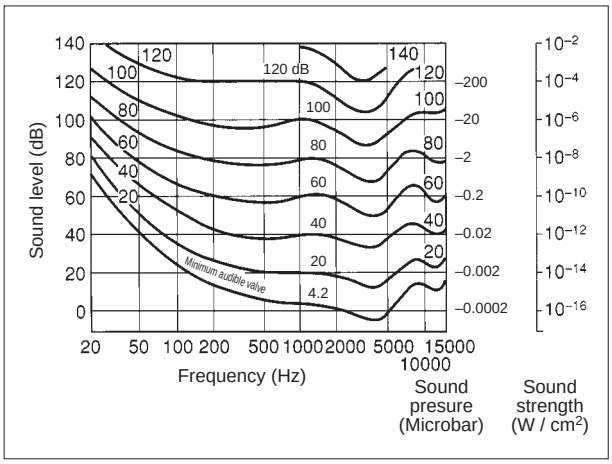

4.2 How to measure sound levels

A sound level meter (JIS C 1502, IEC 651) is used to measure sound levels. This sound level meter has three characteristics (A, B and C characteristics) as shown on the right. These represent various sound wave characteristics.
Generally, the A characteristic, which is the most similar to the human ear, is used.

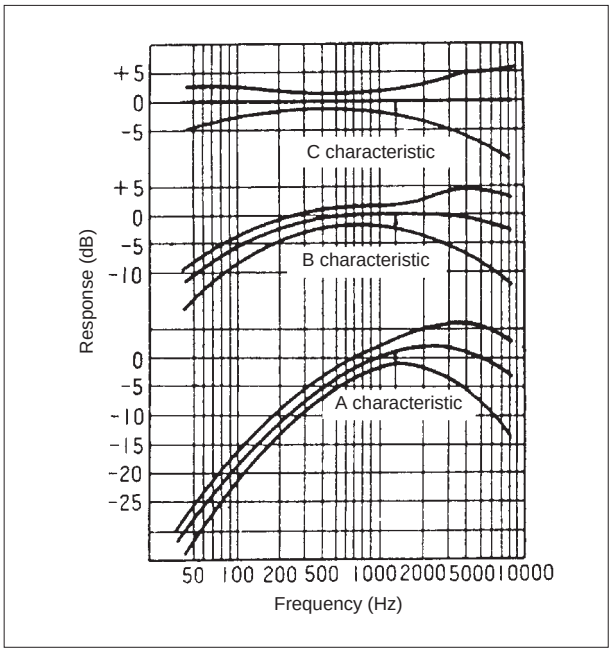

4.3 Frequency analysis of sound

It is said that the human ear senses differently according to the frequency. However, the sound generated from a vibration is not limited to one frequency, but instead, various frequencies are generated at differing levels. This is expressed by the NC curve, which is determined according to the difficulty of hearing a conversation.

- Even if the sound is a very low level, it is annoying if a specific frequency is emitted very loudly.
  These sounds are suppressed to a minimum during product design stages, but, the sound may become very disturbing with resonance of the ceiling, wall, etc.

Example Continuous frequency analysis

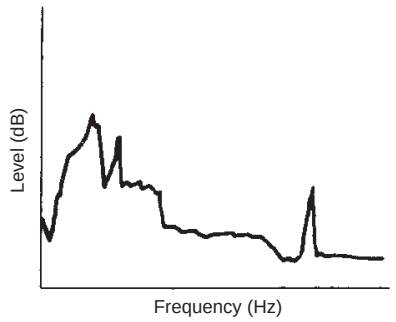

NC curve

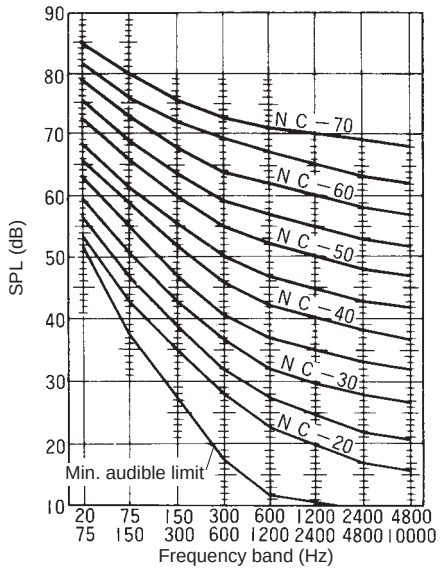

- **Tolerable noise levels and NC values according to room application**

Room application	dB	NC value	Room application	dB	NC value
Broadcasting studio	25	15 - 20	Cinema	40	30
Music hall	30	20	Hospital	35	30
Theatre (approx. 500 seats)	35	20 - 25	Library	40	30
Classroom	40	25	Small office	45	30 - 35
Conference room	40	25	Restaurant	50	45
Apartment	40	25 - 30	Gymnasium	55	50
Hotel	40	25 - 30	Large conference room	50	45
Housing (room)	40	25 - 30	Factory	70	50 or more

* Approximate values of noise levels using practical examples
The following diagram shows noises found near us.
Approximate degree of noise levels can be seen with these examples.

* Noise levels and perception

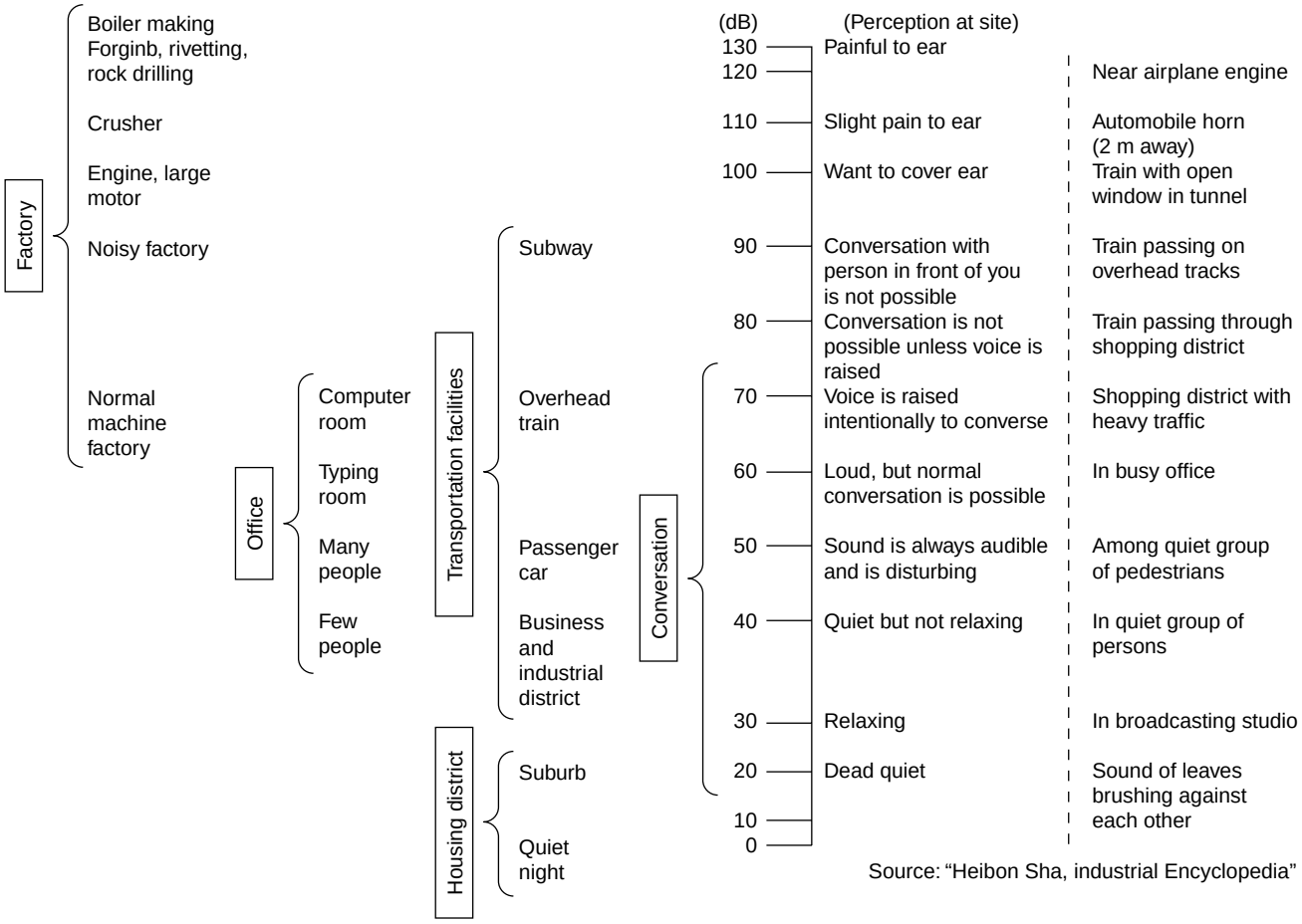

Source: “Heibon Sha, industrial Encyclopedia”

4.4 Indoor noise

(1) Principle of indoor noise

1) Power levels

The Power level (PWL) of the sound source must be understood when considering noise effects.
The following formula is used to obtain PWL from the measured sound pressure data (values noted in catalog) in an anechoic chamber.

PWL = SPLo + 20 logro + 11 [dB]. . . . . (I)

PWL	:	Sound source power level (dB)
SPLo	:	Measured sound pressure in anechoic chamber (dB)
ro	:	Measurement distance (m)

2) Principal model

Consider the room shown in Figs. 1 and 2.

- Fig. 1 shows an example of the integrated main unit and supply air diffuser (and return grille). This is equivalent to the cassette-type Lossnay.
  Fig. 2 shows an example of a separated main unit and supply air diffuser (and return grille). This is equivalent to the ceiling embedded-type Lossnay.
- ⓐ is the direct sound from the supply air diffuser (return grille) and ⓑ is the echo sound. ⓒ (ⓒ1 to ⓒ3) is the direct sound that is emitted from the main unit and duct and passes through the finished ceiling and leaks. ⓓ is the echo sound of ⓒ .

3) Setting of noise

- The following formula is used to obtain the noise value at a position in the room.

$$SPL\ [dB] = PWL + 10 \log \left\{ \underbrace{\frac{Q}{4\pi r^2}}_{(i)} + \underbrace{\frac{4}{R}}_{(ii)} \right\} \quad \text{.....(II)}$$

SPL	:	Sound pressure level at reception point [dB]
PWL	:	Sound source power level [dB]
Q	:	Directivity factor (Refer to Fig. 3)
r	:	Distance from sound source [m]
R	:	Room constant [$R = \bar{\alpha}S/(1 - \bar{\alpha})$]
$\bar{\alpha}$	:	Average sound absorption ratio in room (Normally, 0.1 to 0.2)
S	:	Total surface area in room [m^2]

Fig. 1

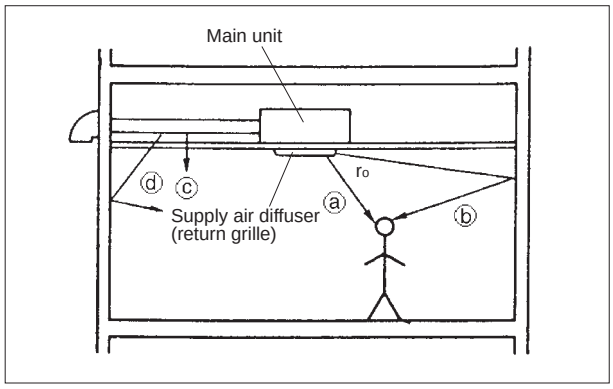

Fig. 2

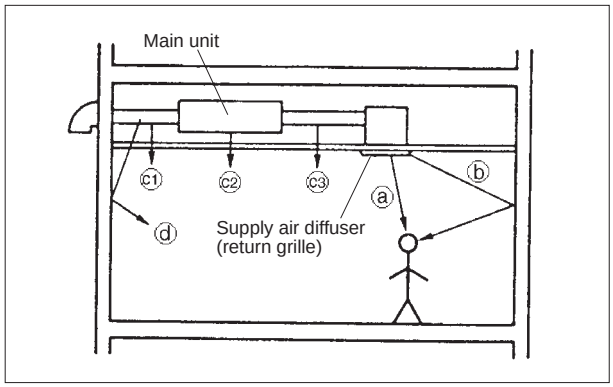

Fig. 3 (Sound source position and directivity factor Q)

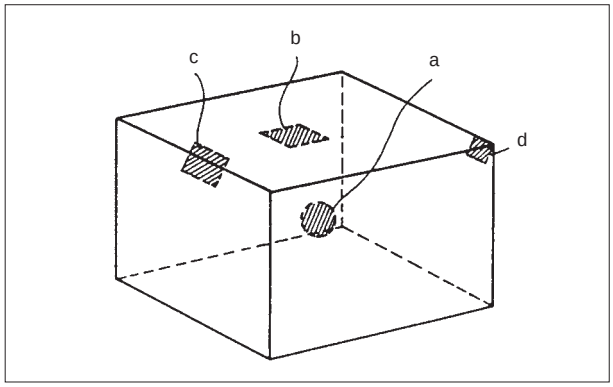

	Sound source position	Q
a	Centre of room	1
b	Centre of ceiling	2
c	Edge	4
d	Corner	8

- For the supply air diffuser (and return grille) in Fig. 2, PWL must be corrected for the noise alternation provided by the duct work (TL) such that:

  PWL' = PWL – TL

- Item i in formula (II) is the direct sound (ⓐ , ⓒ), and ii is the echo sound (ⓑ , ⓓ).
- The number of sound sources in the room (main unit, supply air diffuser, return grille etc.) is obtained by calculating formula (II), and combining the number with formula (III).

  $SPL = 10 \log (10^{SPL_1/10} + 10^{SPL_2/10})$ .....(III)

- The average sound absorption rate in the room and the ceiling transmission loss differ according to the frequency, so formula (II) is calculated for each frequwncy band, and is combined with formula (III) for an accurate value.

Transmission loss in ceiling material (dB) Example

Material ( ) indicates thickness (mm)		Plaster board (7)	Plaster board (9)	Lauan plywood (12)
Average		20	22	23
Frequency band (Hz)	125	10	12	20
	250	11	15	21
	500	19	21	23
	1,000	26	28	26
	2,000	34	35	24
	4,000	42	39	—

(2) Avoiding noise disturbance from Lossnay unit

1) When unit air passage behind ceiling is sound source (Fig. 1 ⓒ , ⓓ , Fig. 2 ⓒ1 to ⓒ3 , ⓓ)

   (A) Avoid the following types of construction when disturbing noise may be emitted from large units. (Refer to Fig. 4)
   - a) Sudden contraction of duct diameter (Ex. ø 250 → ø 150, ø 200 → ø 100)
   - b) Sudden curves in aluminum flexible ducts, etc. (Especially right after unit outlet)
   - c) Opening in ceiling plates
   - d) Suspension on weak material

   (B) The following countermeasures should be taken. (Refer to Fig. 5)
   - a) Use ceiling material with high soundproofing properties (high transmission loss). (Care is required for low frequency components as the difference in material is great).
   - b) Addition of soundproofing material to areas below sound source. (The entire surface must be covered when using soundproofing sheets. Note, that in some cases, covering of the area around the unit may not be possible due to the heat generated from the unit.)

Fig. 4

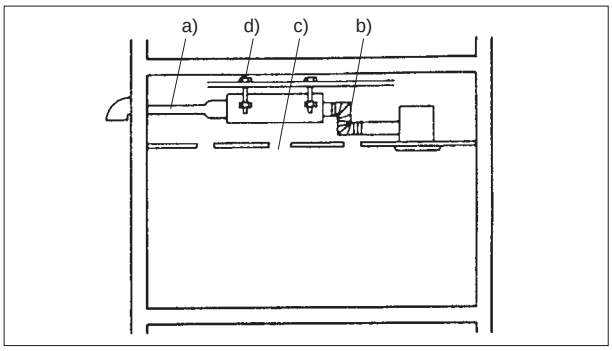

Fig. 5

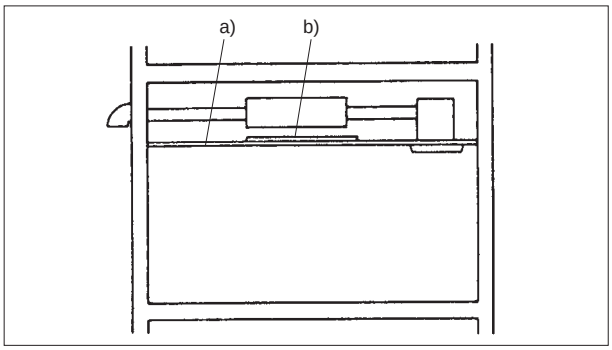

2) When supply air diffuser (and return grille) is sound source ..... part 1

(A) If the main unit is separated from the supply air diffuser (and return grille) as shown in Fig. 6, the use of a silencer box a), silence duct b) or silence grille c) is recommended.

Fig. 6

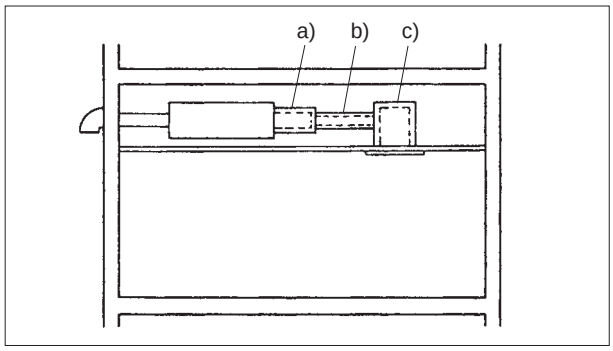

(B) If a draft sound is being emitted from the supply air diffuser (and return grille), branch the flow as shown in Fig. 7 a), lower the flow velocity with a grille, and add a silencer duct to section b).
(If the length is the same, a silencer duct with the small diameter is more effective.)

Fig. 7

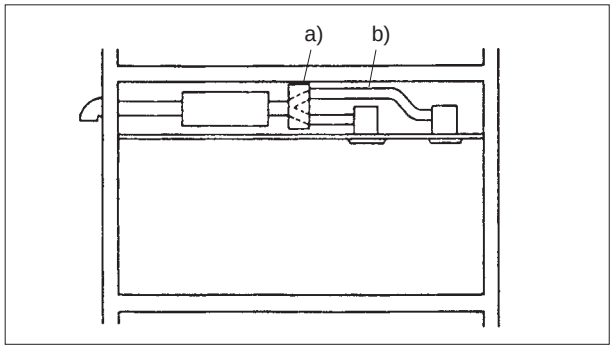

3) When supply air diffuser (and return grille) is sound source ..... part 2

(A) If the main unit and supply air diffuser (and return grille) are integrated as shown in Fig. 8, or if the measures taken in 2) a) and b) are inadequate, the interior material in the room can be changed to that having a high sound absorbency as shown in Fig. 8 a).
This is not, however, very effective towards direct sounds.

(B) Installing the sound source in the corner of the room as shown in Fig. 8 b) is effective towards the center of the room, but will be inadequate towards people in the corner of the room.

Fig. 8

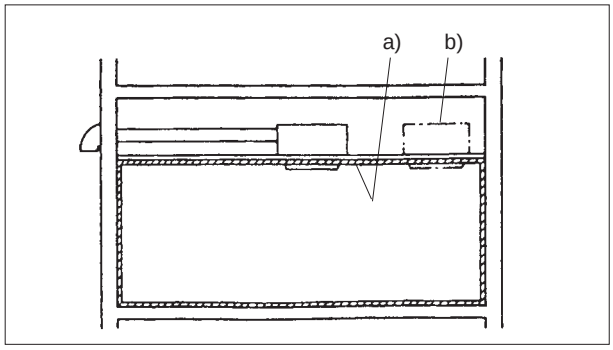

5. NC Curves (LGH-RX4 Series)

● Ceiling embedded-type

LGH-15RX4

Background noise : 25 dB or less (A range)
Measurement site : Anechoic chamber
Operation conditions : Lossnay ventilation
Power supply : 240 V 50 Hz

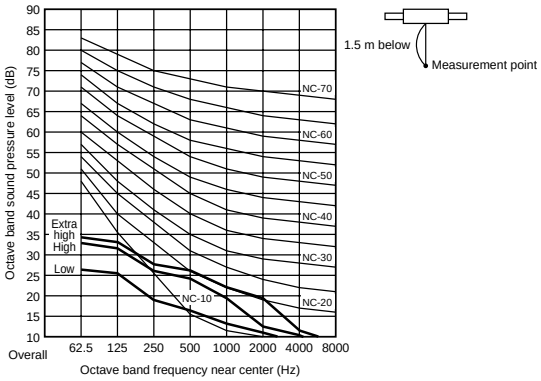

Background noise : 25 dB or less (A range)
Measurement site : Anechoic chamber
Operation conditions : Lossnay ventilation
Power supply : 220 V 60 Hz

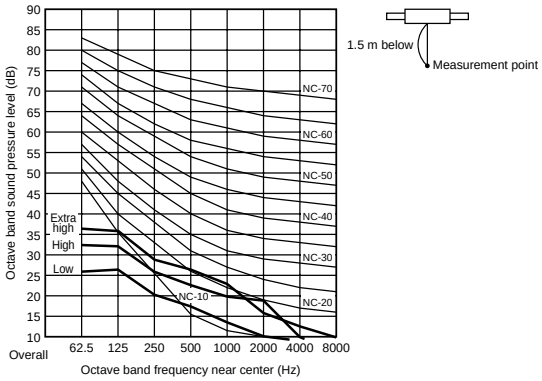

LGH-25RX4

Background noise : 25 dB or less (A range)
Measurement site : Anechoic chamber
Operation conditions : Lossnay ventilation
Power supply : 240 V 50 Hz

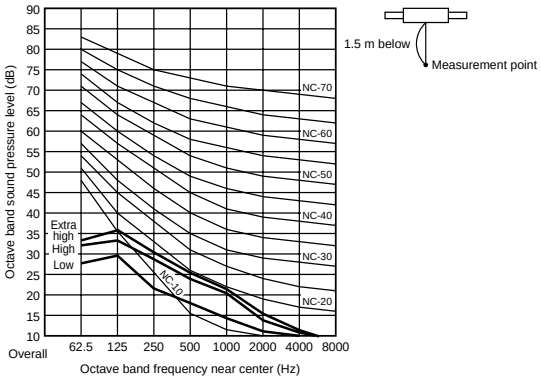

Background noise : 25 dB or less (A range)
Measurement site : Anechoic chamber
Operation conditions : Lossnay ventilation
Power supply : 220 V 60 Hz

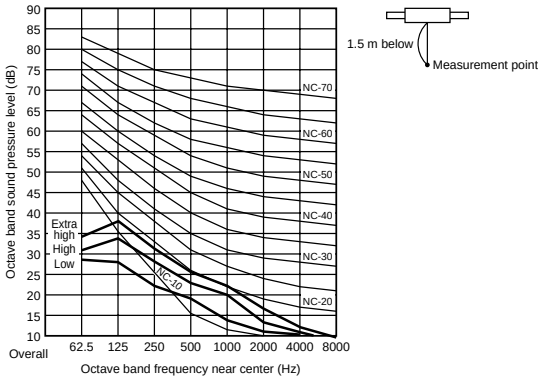

LGH-35RX4

Background noise : 25 dB or less (A range)
Measurement site : Anechoic chamber
Operation conditions : Lossnay ventilation
Power supply : 240 V 50 Hz

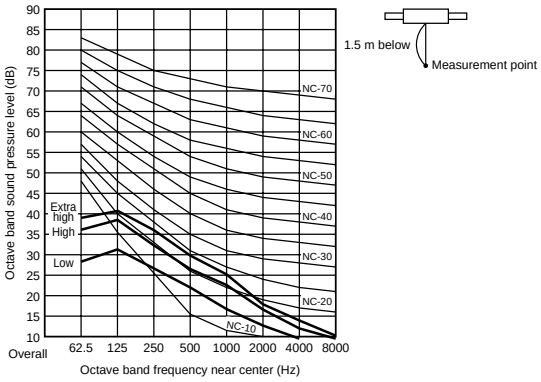

Background noise : 25 dB or less (A range)
Measurement site : Anechoic chamber
Operation conditions : Lossnay ventilation
Power supply : 220 V 60 Hz

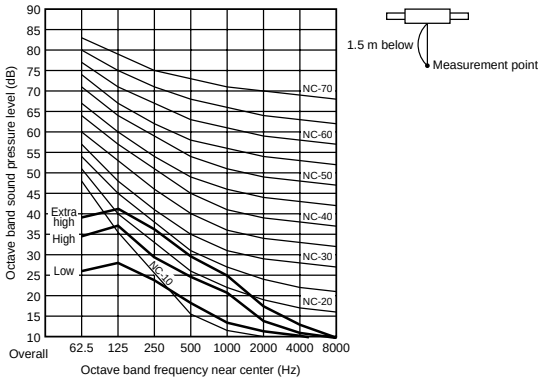

LGH-50RX4

Background noise : 25 dB or less (A range)
Measurement site : Anechoic chamber
Operation conditions : Lossnay ventilation
Power supply : 240 V 50 Hz

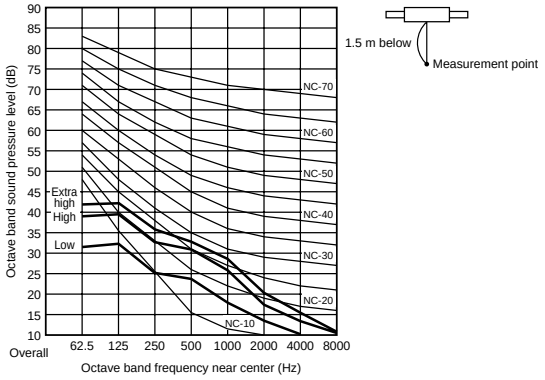

Background noise : 25 dB or less (A range)
Measurement site : Anechoic chamber
Operation conditions : Lossnay ventilation
Power supply : 220 V 60 Hz

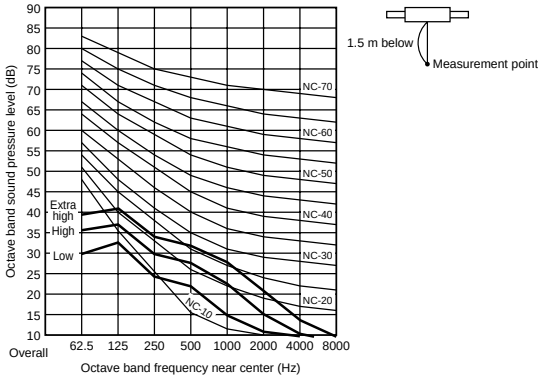

LGH-65RX4

Background noise : 25 dB or less (A range)
Measurement site : Anechoic chamber
Operation conditions : Lossnay ventilation
Power supply : 240 V 50 Hz

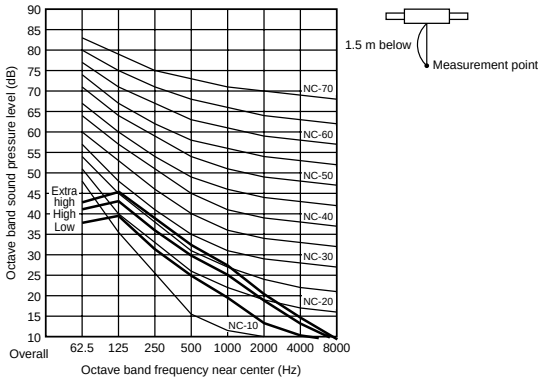

Background noise : 25 dB or less (A range)
Measurement site : Anechoic chamber
Operation conditions : Lossnay ventilation
Power supply : 220 V 60 Hz

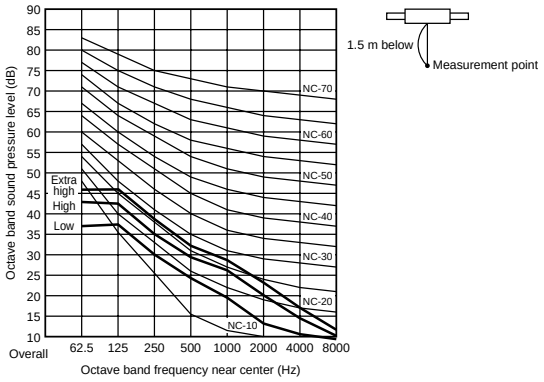

LGH-80RX4

Background noise : 25 dB or less (A range)
Measurement site : Anechoic chamber
Operation conditions : Lossnay ventilation
Power supply : 240 V 50 Hz

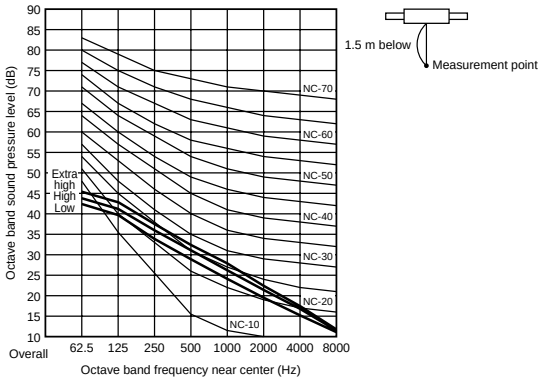

Background noise : 25 dB or less (A range)
Measurement site : Anechoic chamber
Operation conditions : Lossnay ventilation
Power supply : 220 V 60 Hz

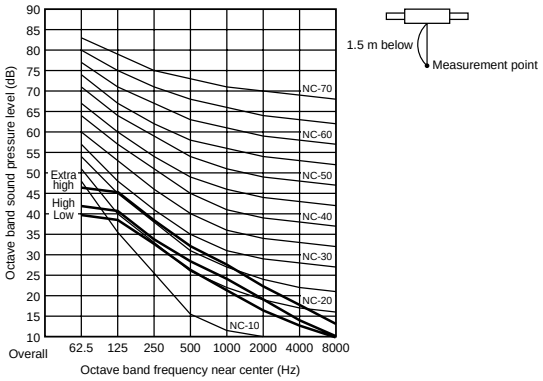

LGH-100RX4

Background noise : 25 dB or less (A range)
Measurement site : Anechoic chamber
Operation conditions : Lossnay ventilation
Power supply : 240 V 50 Hz

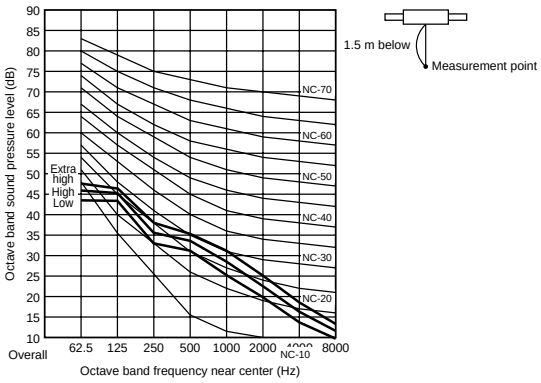

Background noise : 25 dB or less (A range)
Measurement site : Anechoic chamber
Operation conditions : Lossnay ventilation
Power supply : 220 V 60 Hz

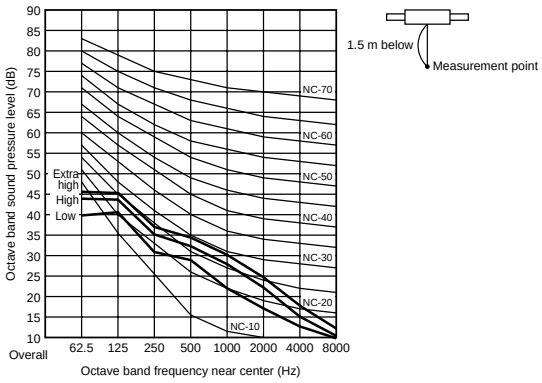

LGH-150RX4

Background noise : 25 dB or less (A range)
Measurement site : Anechoic chamber
Operation conditions : Lossnay ventilation
Power supply : 240 V 50 Hz

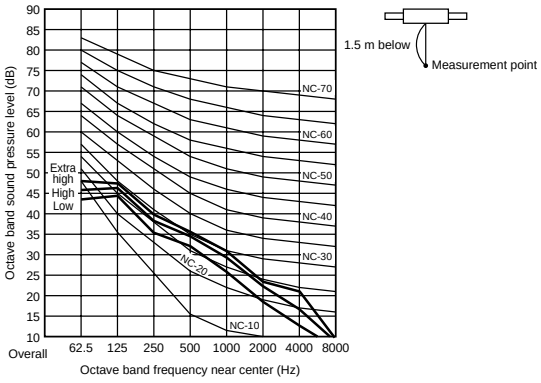

Background noise : 25 dB or less (A range)
Measurement site : Anechoic chamber
Operation conditions : Lossnay ventilation
Power supply : 220 V 60 Hz

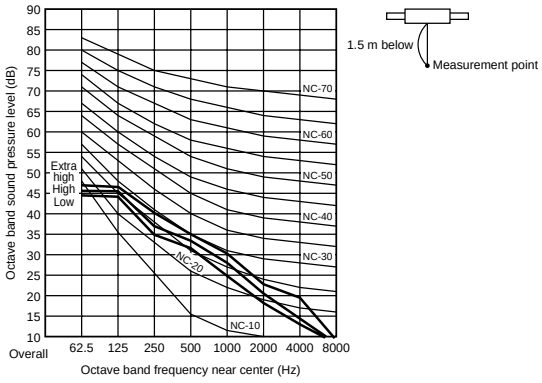

LGH-200RX4

Background noise : 25 dB or less (A range)
Measurement site : Anechoic chamber
Operation conditions : Lossnay ventilation
Power supply : 240 V 50 Hz

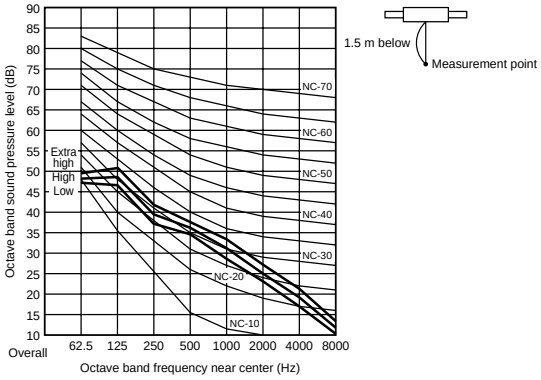

Background noise : 25 dB or less (A range)
Measurement site : Anechoic chamber
Operation conditions : Lossnay ventilation
Power supply : 220 V 60 Hz

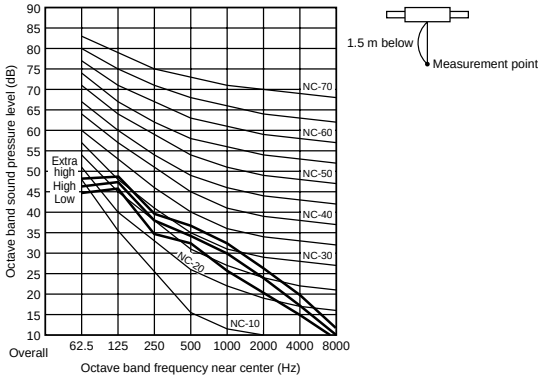

6. List of Models

6.1 List of material colours for Lossnay

Model	Blades		Filter				Insulation material	Product usage conditions		
	Material	Shape, diameter	Material	Dimensions	Q'ty	Filtering efficiency /class	Material	Ambient temperature	Exhaust air conditions (RA)	Supply air conditions (OA)
LGH-15RX4	PP resin	Centrifugal fan ø180	Prefilter NP/400	549 × 125 × 15	2	Gravitational method 82% / EU3	Self-extinguishing urethane foam	-10°C to +40°C RH80% or less	-10°C to +40°C RH80% or less	-10(-15)°C to +40°C RH80% or less
LGH-25RX4	PP resin	Centrifugal fan ø180	Prefilter NP/400	653 × 151 × 15	2	Gravitational method 82% / EU3	Self-extinguishing urethane foam	-10°C to +40°C RH80% or less	-10°C to +40°C RH80% or less	-10(-15)°C to +40°C RH80% or less
LGH-35RX4	PP resin	Centrifugal fan ø220	Prefilter NP/400	784 × 178 × 15	2	Gravitational method 82% / EU3	Self-extinguishing urethane foam	-10°C to +40°C RH80% or less	-10°C to +40°C RH80% or less	-10(-15)°C to +40°C RH80% or less
LGH-50RX4	PP resin	Centrifugal fan ø220	Prefilter NP/400	926 × 178 × 15	2	Gravitational method 82% / EU3	Self-extinguishing urethane foam	-10°C to +40°C RH80% or less	-10°C to +40°C RH80% or less	-10(-15)°C to +40°C RH80% or less
LGH-65RX4	PP resin	Centrifugal fan ø245	Prefilter NP/400	852 × 213 × 15	2	Gravitational method 82% / EU3	Self-extinguishing urethane foam	-10°C to +40°C RH80% or less	-10°C to +40°C RH80% or less	-10(-15)°C to +40°C RH80% or less
LGH-80RX4	PP resin	Centrifugal fan ø245	Prefilter NP/400	880 × 238 × 15	2	Gravitational method 82% / EU3	Self-extinguishing urethane foam	-10°C to +40°C RH80% or less	-10°C to +40°C RH80% or less	-10(-15)°C to +40°C RH80% or less
LGH-100RX4	PP resin	Centrifugal fan ø245	Prefilter NP/400	1,117 × 238 × 15	2	Gravitational method 82% / EU3	Self-extinguishing urethane foam	-10°C to +40°C RH80% or less	-10°C to +40°C RH80% or less	-10(-15)°C to +40°C RH80% or less
LGH-150RX4	PP resin	Centrifugal fan ø245	Prefilter NP/400	890 × 238 × 15	4	Gravitational method 82% / EU3	Self-extinguishing urethane foam	-10°C to +40°C RH80% or less	-10°C to +40°C RH80% or less	-10(-15)°C to +40°C RH80% or less
LGH-200RX4	PP resin	Centrifugal fan ø245	Prefilter NP/400	1,117 × 238 × 15	4	Gravitational method 82% / EU3	Self-extinguishing urethane foam	-10°C to +40°C RH80% or less	-10°C to +40°C RH80% or less	-10(-15)°C to +40°C RH80% or less
LGH-40ES	PP resin	Centrifugal fan ø200	Prefilter NP/400	750 × 160 × 15	2	Gravitational method 82% / EU3	Self-extinguishing urethane foam	-10°C to +40°C RH80% or less	-10°C to +40°C RH80% or less	-10°C to +40°C RH80% or less

Model	Colour		Outside		Heat recovery core				Insulation material	Product usage conditions (Ambient temperature, exhaust air, supply air conditions)
	Colour Munsell symbol	Mitsubishi colour No.	Material	Paint specification	Material	Dimensions without frame	Weight with frame/unit	Q'ty	Material	
LU-500	5Y 6.5/1	N-E6	Steel plate Thickness: 1.6 t	Polyester powder	Incombustible treated paper	□ 550 × 487	22 kg	4	Self-extinguishing urethane foam	-10°C to +50°C RH80% or less

6.2 List of industrial/business Lossnay accessories

Model	Accessories	Duct packaging site
LGH-15RX4 LGH-25RX4 LGH-35RX4 LGH-50RX4 LGH-65RX4 LGH-80RX4 LGH-100RX4	● Duct connection flanges . . . . . × 4 ● Mounting screws . . . . . × 18 ● Protective cover . . . . . × 1 <For installing upside down> ● Slim-Lossnay connection cable . . × 1 (gray : two wires) (● IB . . . . . × 1 ● IM . . . . . × 1)	* Top view. 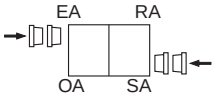 2 are inserted on top of each other at the SA and EA openings, in the opposite direction.
LGH-150RX4 LGH-200RX4	● Mounting screws . . . . . × 16 ● Duct connection flange . . . . . × 4 ● Slim-Lossnay connection cable . . × 1 (gray : two wires) (● IB . . . . . × 1 ● IM . . . . . × 1)	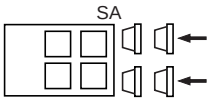 2 are inserted in each SA opening of both the top and bottom units.
LGH-40ES	(● IB . . . . . × 1 ● IM . . . . . × 1)	—
LU-500	(● IB . . . . . × 1)	—

CHAPTER 5
System Design Recommendations

1. Lossnay Usage Conditions

		Main unit installation conditions	Outdoor air and exhaust air conditions
Commercial-use Lossnay		-10°C to +40°C, RH80% or less	-10°C to + 40°C, RH80% or less.
Facility Lossnay	LU model Lossnays	-10°C to +50°C, RH80% or less	Same as left

In some cases special attention needs to be paid to extreme operating conditions.
These are described as below:

1.1 Use in cold climates (outdoor temperature: –5°C or less)

Plot the Lossnay intake air conditions A and B on a psychrometric chart as shown on the right. If the high temperature side air B intersects the saturation curve such as at C, moisture condensation or frosting will occur on the Lossnay. In this case, the low temperature side air A should be preheated to the temperature indicated by point A' so that point C shifts to the point C'.
The LGH-RX4 type has a built-in preheater control circuit. For more information about heater model selection and wiring method, please refer to the Control volume (Technical manual (Controls) page 40).

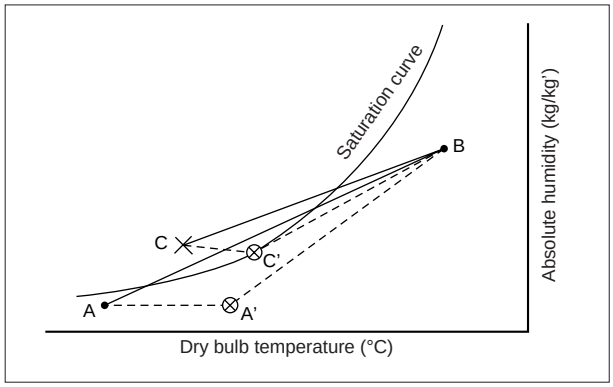

1.2 Use in high humidity conditions (Relative humidity: 80% or more)

When using the system in high humidity conditions such as heated pools, bathrooms, mushroom cultivation houses, etc., moisture will condense inside the Core, and drainage will occur. In these cases, the general purpose Lossnay that uses treated paper cannot be used. Instead the moisture resistant Lossnay must be used.
The following moisture resistant Lossnay models are available. The usage conditions differ so select the model according to the application.

1.3 Use in other special conditions

- **Avoid using Lossnay under air condition with acid, alkalis, organic solvent, oil mist, paint, or harmful gas as presticide, corrosive gas, etc.**
- **Rust, fire or malfunction may occur by brine and hotspring steam.**
  Installing Brine Damage Resistant Filters inside outdoor air duct if the Lossnay operates in the briny air.
- **Outdoor air or mist may flow through the duct into your room when Lossnay is in off- mode at windy and foggy area.**
  To prevent sucking of outdoor air or fog, electric damper is advised to be installed.
- **Use where heat is recovered from odor- laid air and supplied to another place (area) is not possible.**

2. Lossnay LGH series noise level

The noise level specified for Lossnay units is as that measured in an anechoic chamber. The sound level may increase by 8 to 11 dB according to the installation construction material, and room contents, by noise reflection.
When using the Lossnay in a quiet room, it is recommended that measures such as installing a muffling duct be carried out.

3. Attachment of Air Filter

An air filter must be mounted to the air inlets (both intake and exhaust) of the Lossnay to clean the air and to prevent the Core from clogging. Always mount this filter, and periodically service it.

4. Duct Construction

- Always cover the two ducts on the outdoor side (outdoor air intake and exhaust outlet) with insulation to prevent frost or condensation.
- The outdoor duct gradient must be 3.3% or more (to wall side) to prevent rain water from rain water running towards the Lossnay. (Refer to page 86).
- Do not use the standard vent caps or round hoods where they may come into direct contact with rain water.
  (Instead, use of a deep hood is recommended.)

5. By-pass Ventilation

Do not operate with “By-pass ventilation” when heating during winter. Frost or condensation may form on the main unit and cause discolouring of the ceiling, etc.

6. Transmission Rate of Various Gases and Related Maximum Workplace Concentration

Measurement conditions	Gas	Air volume ratio Q_{SA}/Q_{RA}	Exhaust air concentration C_{RA} (ppm)	Supply air concentration C_{SA} (ppm)	Transmission rate (%)	Max. workplace concentrations (ppm)
Measurement method • Chemical analysis with colorimetric method for H_2SO_4 • Ultrasonic method with gas concentration device for CO, SF_6 • Infrared method with gas concentration device for CO_2 • Gas chromatography for others The fans are positioned at the air supply/exhaust suction positions of the element Measurement conditions: 27°C, 85% RH * OA density for CO_2 is 500 ppm.	Hydrogen fluoride	1.0	36	<0.5	- 0	0.6
	Hydrogen chloride	1.0	42	<0.5	- 0	5
	Nitric acid	1.0	20	<0.5	- 0	10
	Sulfulic acid	1.0	2.6 mg/m^3	- 0 mg/m^3	- 0	0.25
	Trichlene	1.0	85	1.36	1.6	200
	Acetone	1.0	5	0.04	0.8	1,000
	Xylene	1.0	313	<5.0	<1.6	150
	Isopropyl alcohol	1.0	3,000	<25	<0.8	400
	Methanol	1.0	41	0.49	1.2	200
	Ethanol	1.0	35	0.49	1.4	1,000
	Ethyl acetate alcohol	1.0	25	0.28	1.1	400
	Ammonia	1.0	290	7.25	2.5	50
	Hydrogen sulfide	1.0	15	0.24	1.6	10
	Carbon monoxide	1.0	71.2	0.43	0.6	
	Carbon dioxide	1.0	37,800	600	0.3	
	Smoke	1.0	–	–	1 - 2	
	Formaldehyde	1.0	32	0.3	0.9	0.08
	Sulfur hexaflouride	1.0	116	0.8	0.7	
	Skatole	1.0	27.1	0.56	2.0	
	Indole	1.0	27.1	0.56	2.0	
	Toluene	1.0	6.0	0.1	1.7	

⚠ **CAUTION**

The above does not apply to the moisture resistant total heat recovery unit.

7. Solubility of Odors and Toxic Gases, etc., in Water and Effect on Lossnay Core

Main generation site	Gas name	Molecular formula mist	Gas vapour odor	Non-toxic/ toxic/	Sulubility in water		Max. workplace concentration	Useability of Lossnay
					mℓ/mℓ	g/100g		
Chemical plantor chemical laboratory	Sulfuric acid	H_2SO_4	Mist	Found		2,380	0.25	×
	Nitric acid	HNO_3	Mist	Found		180	10	×
	Phosphoric acid	H_3PO_4	Mist	Found		41	0.1	×
	Acetic acid	CH_3COOH	Mist	Bad odor		2,115	25	×
	Hydrogen chloride	HCl	Gas	Found	427	58	5	×
	Hydrogen fluoride	HF	Gas	Found		90	0.6	×
	Sulfur dioxide	SO_2	Gas	Found	32.8		0.25	△
	Hydrogen sulfide	H_2S	Gas	Found	2.3		10	△
	Ammonia	NH_3	Gas	Bad odor	635	40	50	×
	Phosphine	PH_3	Gas	Found	0.26		0.1	○
	Methanol	CH_3OH	Vapor	Found	Soluble		200	△
	Ethanol	CH_3CH_2OH	Vapor	Found	Soluble		1,000	△
	Ketone		Vapor	Found	Soluble		1,000	△
Toilet	Skatole	C_9H_9N	Gas	Bad odor	Minute			○
	Indole	C_9H_7N	Gas	Bad odor	Minute			○
	Ammonia	NH_3	Gas	Bad odor	635	40	50	×
Others	Nitric monoxide	NO			0.0043		50	○
	Ozone	O_3				0.00139	0.1	○
	Methane	CH_4			0.0301			○
	Chlorine	Cl_2			Minute		0.5	○
Air (reference)	Air	Mixed gases	Gas	None	0.0167			○
	Oxygen	O_2	Gas	None	0.0283			○
	Nitrogen	N_2	Gas	None	0.0143			○
	Carbon monoxide	CO	Gas	Found	0.0214			○
	Carbon dioxide	CO_2	Gas	None	0.759			○

Note: 1. Water soluble gases and mists cannot be used because the amount that is transmitted with the water is too great.
2. Acidic gases and mists cannot be used because these will accumulate in the Core and cause damage.
3. The above does not apply to the moisture resistant total heat recovery unit.

8. Positioning of the Supply/Exhaust Fans and the Air Transmission Rate (excluding moisture resistant total heat recovery units) (only for LU type)

The following four methods can be used for when setting the Lossnay supply and exhaust fans around the Lossnay Core. When using the LU models, methods a or b should be used in respect of both the Lossnay Core air leakage and effective air ventilation. Use method c if air leakage to the RA or SA sides is not allowed such as in hospital air conditioning, or transmission of the fan noise into the room must be suppressed by putting the Lossnay Core between the supply/exhaust fans and room, and if a certain degree of air leakage is allowed between OA to EA.

a. Installing the supply fan (OA-SA) and exhaust fan (RA-EA) for suction feed to the Lossnay Core

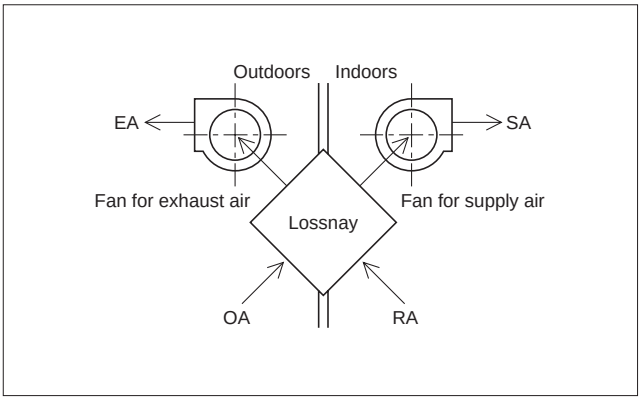

If the static pressure difference between SA and RA and between EA and OA is 50mmAq, the air leakage rate will be 2.5%, and 3.4%. This value is of no problem for most standard uses.

b. Installing the supply fan (OA-SA) and exhaust fan (RA-EA) for forced supply to the Lossnay Core

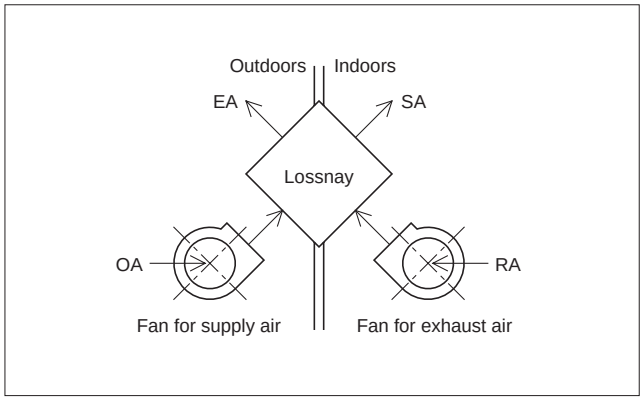

The air leakage rate is the same as in system a.

c. Installing the supply fan (OA-SA) for force feed and the exhaust fan (RA-EA) for suction feed

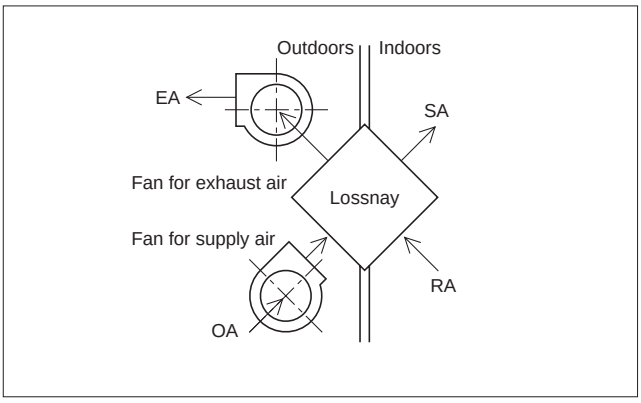

In this case, the positive/negative relation of the static pressure will be the reverse of that in system d, and the air leakage outside the room (leakage from OA to EA) will be the same as system d. Thus, the effective volume of ventilating air will be reduced by that rate.

d. Installing the supply fan (OA-SA) for suction feed and the exhaust fan (RA-EA) for force feed

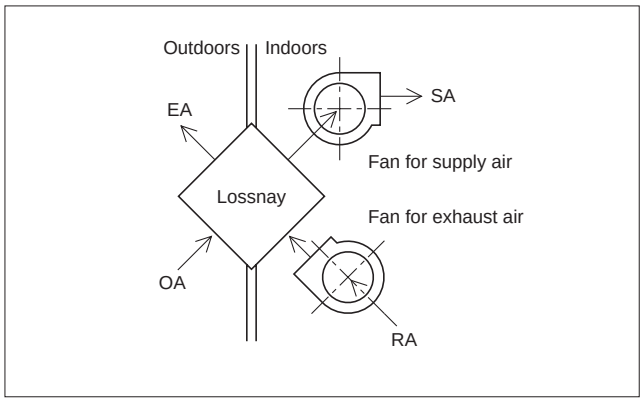

In this case, the intake side pressure (OA-SA) will be negative, and the exhaust side pressure (RA-EA) will be positive, so the amount of air leakage to the intake side will be the greatest. If the static pressure difference between OA and RA is 50 mmAq, the air leakage rate will be 10.5%, and 13.0%.
This system can be used when an air leakage of 10% to the intake side (OA-SA) is permitted, but should be avoided in all other cases.

9. Combined Operation with other Air Conditioners (Refer to technical manual (Control) in detail)

Connecting the Lossnay can configure the following system.

Interlocked with City Multi

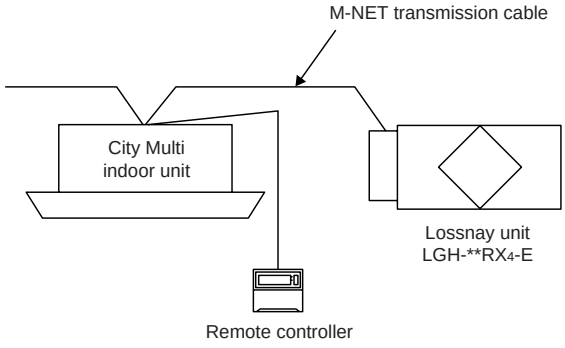

Interlocked with Mr. Slim

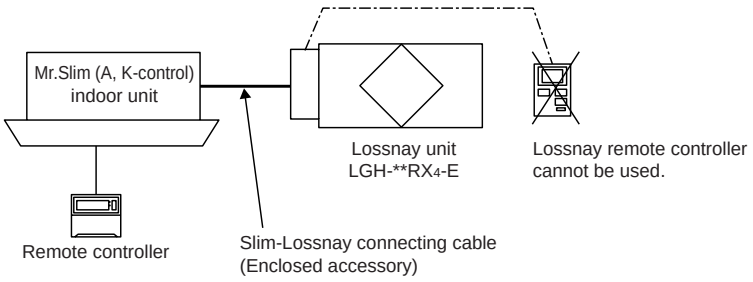

Independent Lossnay Unit (Not interlocked with City Multi or Mr. Slim systems.)

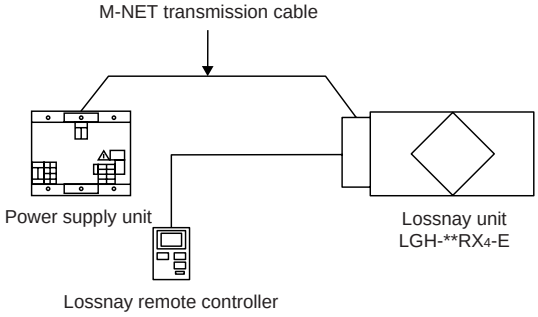

Interlocked with external unit (BMS)

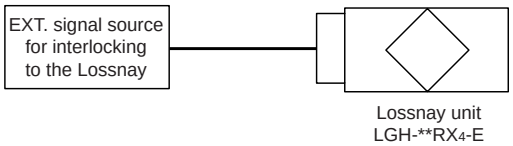

10. Automatic Ventilation Switching (Refer to technical manual (Control) page 38)

Effect of Automatic Ventilation Mode

The automatic damper mode automatically provides the correct ventilation for the conditions in the room. It eliminates the need for troublesome switch operations when setting the Lossnay ventilator to “By-pass” ventilation. The following shows the effect “By-pass” ventilation will have under various conditions.

(1) Reduces cooling load

If the air outside is cooler than the air inside the building during the cooling season (such as early morning or at night), “By-pass” ventilation will draw in the cooler outside air and reduce the cooling load on the system.

(2) Cooling using outdoor air

During cooler seasons (such as between spring and summer or between summer and fall), if the people in a room cause the temperature of the room to rise, “By-pass” ventilation draw in the cool outside air and use it as is to cool the room.

(3) Night purge

“By-pass” ventilation can be used to release hot air from inside the building that has accumulated in buildings a business district during the hot summer season.

(4) Office equipment room cooling

During cold season, outdoor air can be drawn in and used as is to cool rooms where the temperature has risen due to the use of office equipment.
(Only when interlocked with City Multi and Mr. Slim indoor unit)

11. Vertical Installation of LGH Series

Installation of ceiling embedded-type industrial Lossnay

11.1 Top/bottom reverse installation

All LGH-RX4 models can be installed in reverse.

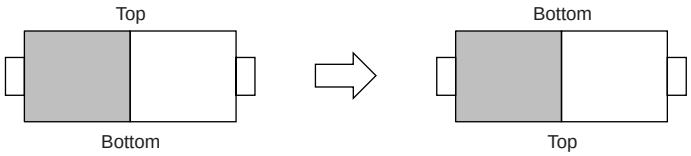

11.2 Vertical installation

Vertical installation is possible, but the installation pattern is limited for some models. Refer to the following table for the installation patterns.

Model name	Installation patterns
LGH-15RX4 LGH-25RX4	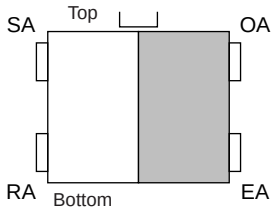
LGH-35RX4 LGH-50RX4 LGH-65RX4 LGH-80RX4 LGH-100RX4	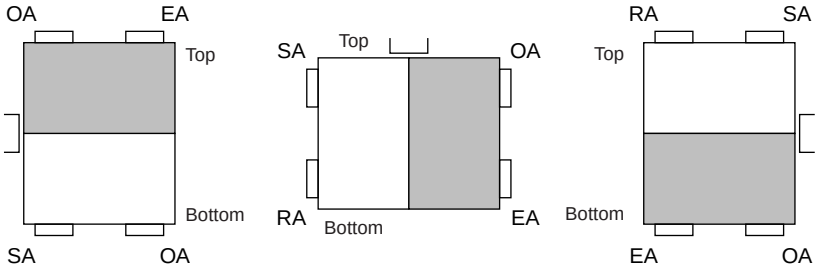

(Precautions)

- When constructing for vertical installation, make sure that rain water will not enter the Lossnay unit from outdoors.
- Always transport the unit in the specified state. Vertical installation applies only to after installation, and does not apply to transportation.
  (The motor may be damaged if the unit is transported vertically.)

11.3 Slanted installation

Slanted installation is not possible.

Special note

The LGH-RX4 model was conventionally designed for being embedded in the ceiling. If possible, vertical installation should be avoided in regard to construction and maintenance.

12. Installation of Supplementary Fan Devices After Lossnay Unit

On occasions it may be necessary to install additional fans in the ductwork following the LGH type Lossnay. This is because of the inclusion of extra components such as control dampers, high-efficiency filters, sound attenuators, etc. which create a significant extra static pressure to the airflow. An example of such an installation is as shown below.

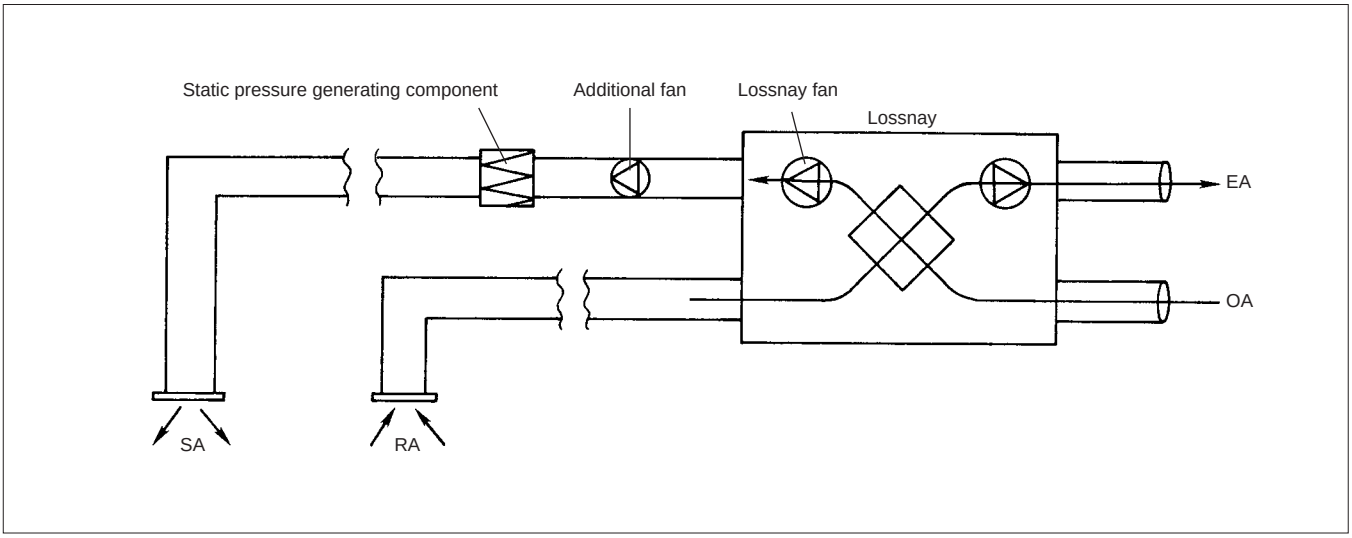

For such an installation care should be taken to avoid undue stress on the fan motors. Referring to the diagrams below, Lossnay with extra fan should be used at the point of left side from A.

Q-H for Lossnay without extra fan

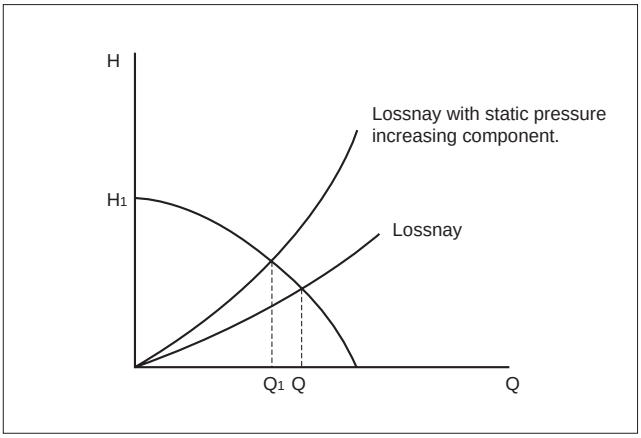

Q-H for Lossnay with extra fan

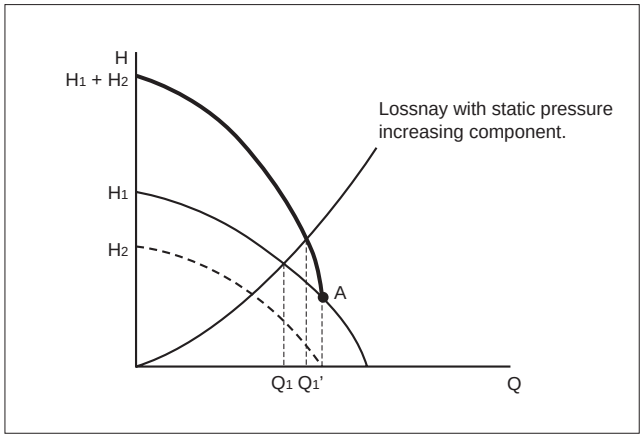

CHAPTER 6
Examples of Lossnay Applications

Lossnay ventilation systems are proposed for eight types of applications in this chapter. These systems are planned for Japanese use, and actual systems will differ according to each country. These should be used only as reference.

1. Large Office Building

1.1 System plan points

Conventional central systems in large buildings, run in floor and building ducts, have generally been preferred to individual room units. Thus, air conditioning and ventilation after working hours was not possible.
In this plan, an independent dispersed ventilation method has been applied to resolve this problem. Such a system's main advantage is that it allows 24-hour operation.
A package-type air conditioning unit is installed in the ceiling, and ventilation is performed with the ceiling-embedded-type Lossnay. Ventilation in the toilet, kitchenette and lift halls, etc., is performed with a straight centrifugal fan.

Setting outline

- Building form : Basement floor SRC (Slab Reinforced Concrete), 8 floors above ground S construction
  Total floor space 30,350 m^2
- Basement : Employee cafeteria
- Ground floor : Lobby, conference room
- 2 to 7th floor : Offices, salons, board room
- Air conditioning : Package air conditioning
- Ventilation : Ceiling embedded-type Lossnay, straight centrifugal fan

1.2 Current topics

(1) Operation system that answers individual needs is required.
- Free independent operation system
- Simple control

(2) Effective use of floor space
(elimination of machine room)

(3) Application to Building Management Laws
- Effective humidification
- Elimination of indoor dust

(4) Energy conservation

1.3 Proposed details

(1) Air conditioning

- In general offices, the duct method will be applied with several ceiling-embedded multiple cooling heat pump packages in each zone to allow total zone operation.
- Board rooms, conference rooms and salons will be air conditioned with a ceiling embedded-type or cassette-type multiple cooling heat pump package in each room.

Installation state of office system air conditioning system – The air supplied from the Lossnay is introduced into the intake side of the air conditioner, and the room stale air is directly removed from the inside of the ceiling.

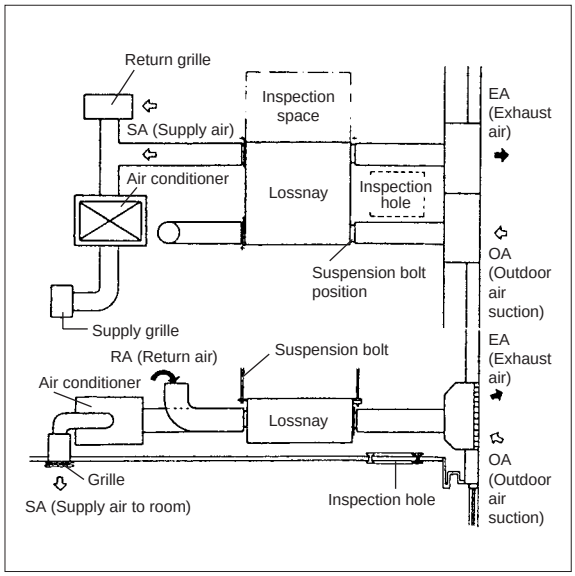

(2) Ventilation

- For general offices, a ceiling embedded-type Lossnay will be installed in the ceiling. The inside of the ceiling will be used as a return chamber for exhaust, and the air from the Lossnay will be supplied to the air-conditioning return duct and mixed with the air in the air conditioning passage. (Exhaust air is taken in from the entire area, and supply air is introduced into the air conditioner to increase the ventilation effectiveness for large rooms.)
- For board rooms, conference rooms and salons, a ceiling embedded-type Lossnay will be installed in the ceiling. The stale air will be duct exhausted from the discharge grille installed in the centre of the ceiling. The supply air will be discharged into the ceiling, where after mixing with the return air from the air conditioner it is supplied to the air conditioner.
- The air in the toilet, kitchenette, and lift hall, etc., will be exhausted with a straight centrifugal fan in each room. The OA supply for this section will use the air supplied from the Lossnay. (The OA volume will be obtained by setting the Lossnay supply fan in the general office to the extra-high notch.)

Installation state of air conditioning system for board rooms, conference rooms, salons - the air supplied from the Lossnay is blown into the ceiling, and the stale air is removed from the discharge grille.

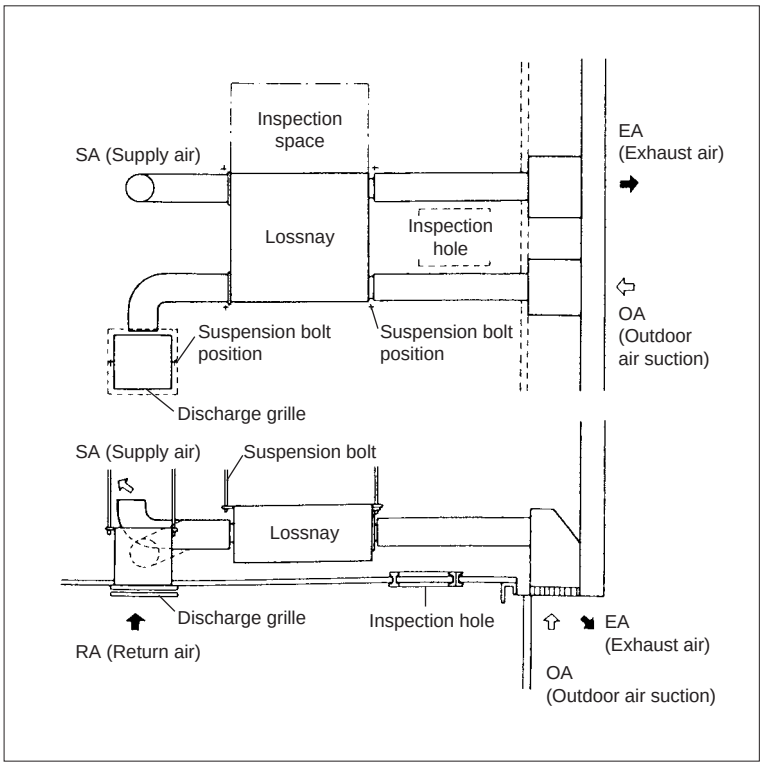

- A gallery will be constructed on the outer wall for the outer wall exhaust air outlets to allow for blending in with the exterior.

Reference floor air conditioner system layout

= Lossnay Ⓐ Air-cooling heat pump air conditioner

Ⓑ Air-cooling heat pump air conditioner

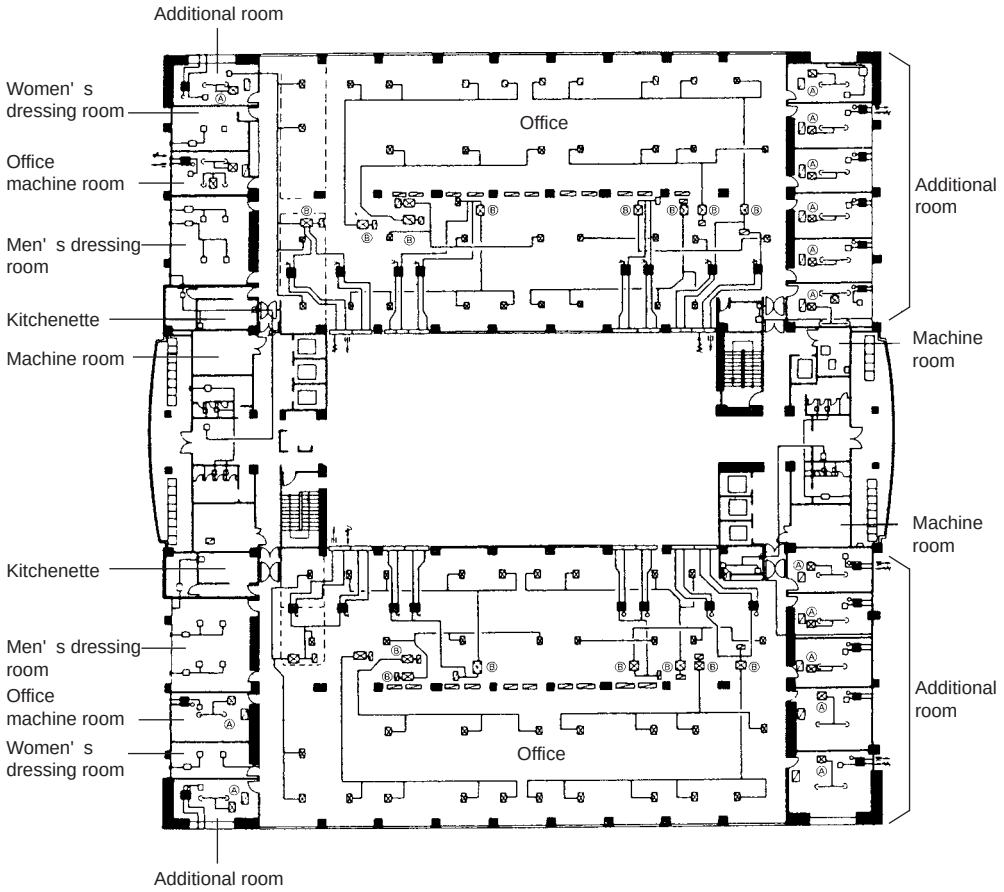

(3) Humidification

If the load fluctuation of the required humidification amount is proportional to the ventilation volume, it is ideal to combine the humidifier installation with the ventilation system. For this application, the humidifier is installed on with the air supply side of the Lossnay.

(4) Conformation to Building Laws

The most important consideration here is humidification and dust removal; in these terms, it is recommended that a humidifier is added to the air conditioning system for the office system to allow adequate humidification.
Installation of a filter on each air circulation system in the room is effective for dust removal, but if the outdoor air inlet is near the dust source, such as a road, a filter should also be installed on the ventilation system.

1.4 Effect

(1) Air conditioning and ventilation needs can be met on an individual basis.

(2) Operation is possible with a 24-hour system.

(3) Operation is simple with the switches being in the room. (A controller is not required.)

(4) Floor space is saved and thus the floor can be used to the maximum.

(5) Energy is conserved with the independent heat recovery.

(6) Fresh air air-conditioning is possible with the independent system.

2. Medium Size Office Building

2.1 System plan point

In recent building air conditioning systems, demands for a consistent rationalization from design through operation and control aspects are being made to meet diversified building needs.
In the entire air conditioning facility, either the cooling/heating source equipment or specific air conditioning equipment is considered as being only one element. Thus, it is important to design this element so that it covers the user's needs while providing total amenity.
This air conditioning system plan is for a so-called company building that is largely divided into the general office section (hereinafter referred to as general floors) and special room sections including board rooms and conference rooms (hereinafter referred to as special floors). Furthermore, Building Management Laws are applied to the building due to the scale.

Setting outline

- Building area : 862.2 m^2
- Total floor area : 7,093 m^2
- No. of floors : Basement, above ground 8, penthouse 1
- Application per floor : Basement ..... Parking area
  Ground floor ..... Large hall
  1 to 5 ..... Offices
  6 to 7 ..... Special rooms

2.2 Current topics

For general office buildings of the past, centralized air conditioning methods allowing the total centralized control and systematization of the entire building (or divided into floor systems) were favoured due mainly to facility control, uniformity of operation hours, maintenance efficiency and building usage. However, when additional work was required to be done on these systems problems occurred.

A comparison of the following items in each system is shown in Table 1.
- Energy conservation (air conditioning power)
- Space saving (area required for air conditioning facilities)
- Flexibility (zoning and refurbishing)

Table 1 Comparison of air conditioning systems

	Air conditioning system	Air conditioning power (kW)			Required area (m^2)				Sleeve size of beam × Q'ty (Per floor)	Zoning	Refur-bishing	Cleanliness (Building Management Law)	Noise
		Heat source	Load	Total	Shaft	Machine room	Roof	Total					
A	Air-cooling heat pump chiller + Air handling unit on each floor + Floor-type fan coil unit (perimeter)	317	105	422	80	513	140	733	ø100 × 162	Possible for each system (each air conditioner)	Same as left	Possible by assembling required specification filter on air conditioner	Noise control possible
B	Air-cooling heat pump chiller + Ceiling embedded- type fan coil unit + Ceiling embedded-type outdoor air treatment unit	317	45	362	80	–	140	220	ø100 × 162 ø250 × 108	Possible for each outdoor air treatment unit (Per unit size)	Same as left	Possible by assembling required specification filter on outdoor air treatment unit and fan coil unit	Little noise emitted
C	Air-cooling heat pump chiller Single suction method	393	67	460	50	567	–	617	ø100 × 45	Possible for each air conditioner	Same as left	Possible by assembling required specification filter on air conditioner	Relatively loud
D	Ceiling embedded- type air-cooling heat pump Package air conditioner (City Multi) + Ceiling embedded-type outdoor air treatment unit	239	47	286	80	–	150	230	ø250 × 189	Possible for each outdoor air treatment unit (Per unit size)	Same as left	Possible by assembling required specification filter on air conditioner and outdoor air treatment unit	Little noise emitted, but louder than B system
E	B system + D system (combined use) (B system for general floors) (D system for special floors)	285	53	338	80	–	200	280	ø100 × 144 ø250 × 21	Possible for each outdoor air treatment unit (Per unit size)	Same as left	Possible by assembling required specification filter on outdoor air treatment unit, air conditioner and fan coil unit	Little noise emitted

2.3 Proposed details

A) General floors

An independent dispersed-type control system incorporating an air cooling heat pump chiller and cassette-type fan coil unit for cooling and heating is used. This can cater for load fluctuations resulting from increases in office automation systems or changes in partitions hence requiting independent control of each module zone (approx. 70 m^2). Outdoor-Air Processing unit is used for ventilation and humidification, and construction and space is reduced by using a system ceiling and ceiling chamber method. (Table 1 B system)

B) Special floors

City Multi and Outdoor-Air Processing unit are applied as package-type independent units, located so as to conform with lighting fixtures, air outlets and suction inlets in rooms where the interior is important while ensuring the required air-conditioning quality. (Table 1 D system)

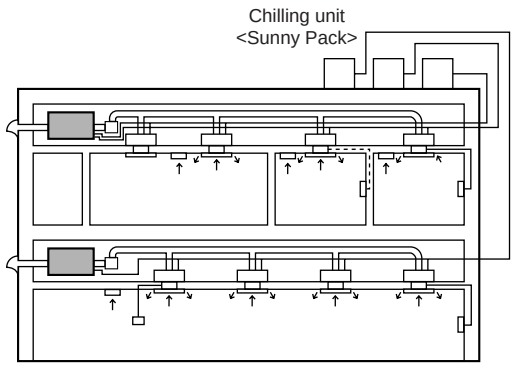

System using fan coil unit (general floors)

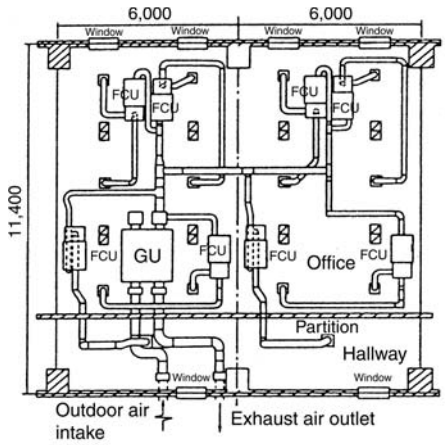

Unit (mm)

General floor air conditioning facilities

: Air intake
: Supply diffuser
FCU : Fan coil unit
GU : Outdoor-Air processing unit

2.4 Effect

(1) Individual control is possible

Individually dispersed air conditioning that creates a comfortable environment according to general floor and special floor needs is realised.

(2) Energy conservation

Wasted air conditioning energy is eliminated allowing great reduction in operation costs.

(3) Space saving

The Outdoor-Air Processing unit, fan coil unit and building air conditioner are all ceiling embedded-types, so the back of the ceiling is used effectively, saving machine room space and floor space.

(4) Construction saving

The ventilation functions have been unitised with the Outdoor-Air Processing unit, and all air conditioner units can be unitised allowing construction to be reduced.

(5) Simple architecture layout

Machine room space and main duct space for air conditioning are not required, so limits in the layout are reduced.

	New air conditioning system	Conversional air conditioning system
Heat source equipment	Air-cooling heat pump chiller	Air-cooling heat pump chiller
Air Conditioner	Outdoor air treatment unit Outdoor-Air Processing unit (8 units on each floor) ⇐ Ceiling embedded-type fan coil unit	Air handling unit (1 unit on each floor) ⇐ Floor-type fan coil unit

Ratio with convertional air conditioning system as 100

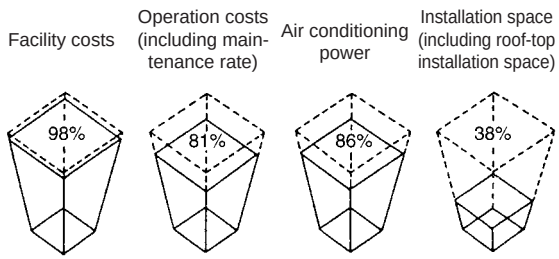

Compaarison with conventional air conditioning system

2.5 System trends

- Creation of an environment including independence, management and control of each zone can be realised as work trends become more diversified.
- Simultaneous cooling/heating system due to necessity from increased fixed sash windows and increase in office automation systems.
- Attention is being paid to building management methods which manage not only air conditioning systems for several buildings at one location but also manage other information.

3. Multipurpose Tenant Building

3.1 System plan points

In many business district buildings, use of the lower floors for shops, halls and theatres, etc., and the middle and upper floors for offices and tenants is often seen. An air conditioning and ventilation system using a per floor method with each floor as a tenant unit is proposed in this example.

Setting outline

- Application : Business (lower floors), office tenants (mid- to upper floors)
- Building form : SRC (Slab Reinforced Concrete)
- Total floor space : 6,334 m^2 (B1 to 8F)
- Application per floor : B1: Storage, machine room
  GF, 1F : Bank
  2F, 3F : Theatre, concert hall
  4F to 8F : Tenant offices
- Air conditioning : Machine room installation-type package air conditioner, ceiling suspended cassette-type air conditioner
- Ventilation : Building Lossnay, ceiling suspended cassette-type Lossnay, straight centrifugal fan

3.2 Current topics

(1) The operation times of the lower floors and that in the mid- to upper floors differ. (Efficiency and adaptability is required in control and operation aspects.)

(2) Maintainability is poor when the system is too dispersed.

(3) Handling of needs in tenant units is poor when the system is too concentrated.

(4) When a centralized heat source system is applied, a maximum load adaptability and maintenance control system is required.

(5) When ventilation is too dispersed, designing of the outer wall becomes a problem.

Installation state

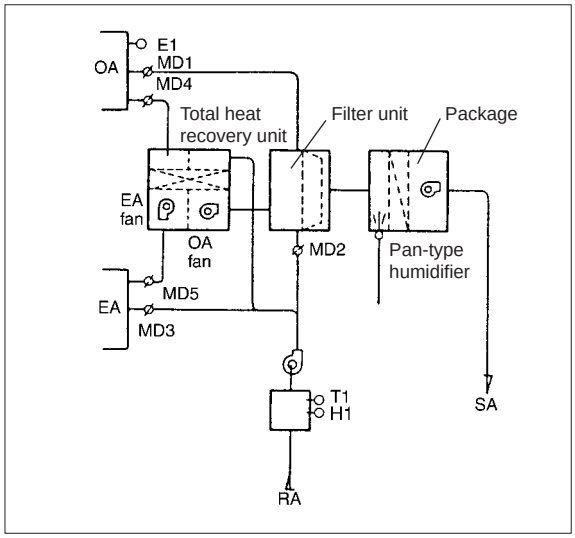

3.3 Plan details

(1) Lower floors for business

A machine room installation-type package and building Lossnay is applied as a centralized method for each unit.
(One system for ground and 1st floor banking institution, one system for 2nd and 3rd floor hall.)

(2) Mid- to upper floors for office tenants

As an air conditioning system for each floor unit, a package air conditioner and Lossnay LP is combined in the machine room to handle the interior load and ventilation, and a ceiling suspended cassette-type package to handle the perimeter.
The toilet and kitchenette are ventilated with a straight centrifugal fan on each floor, and supply for the outdoor air is provided to the LP Lossnay air supply.
This allows independent operation and control for each floor.

(3) Control room, lounge, etc.

Independent use is possible with the ceiling suspended-type air-conditioner and ceiling suspended cassette-type Lossnay.

- **4F to 8F:**
  Tenant offices – Lossnay installation sites: machine room on each floor

To reduce installation space, a package-type LP Lossnay with built-in air-supply fan and filter is incorporated and combined with the air conditioner in the machine room on each floor.

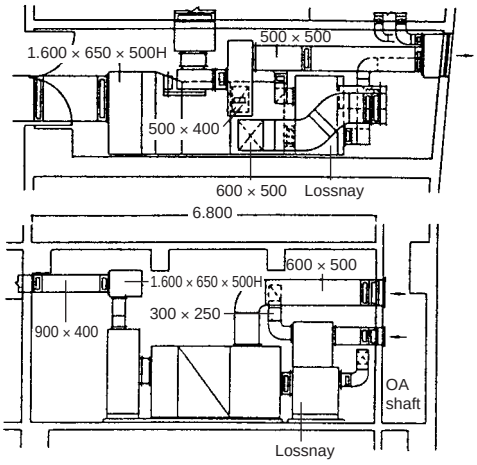

Unit (mm)

Air conditioning system diagram

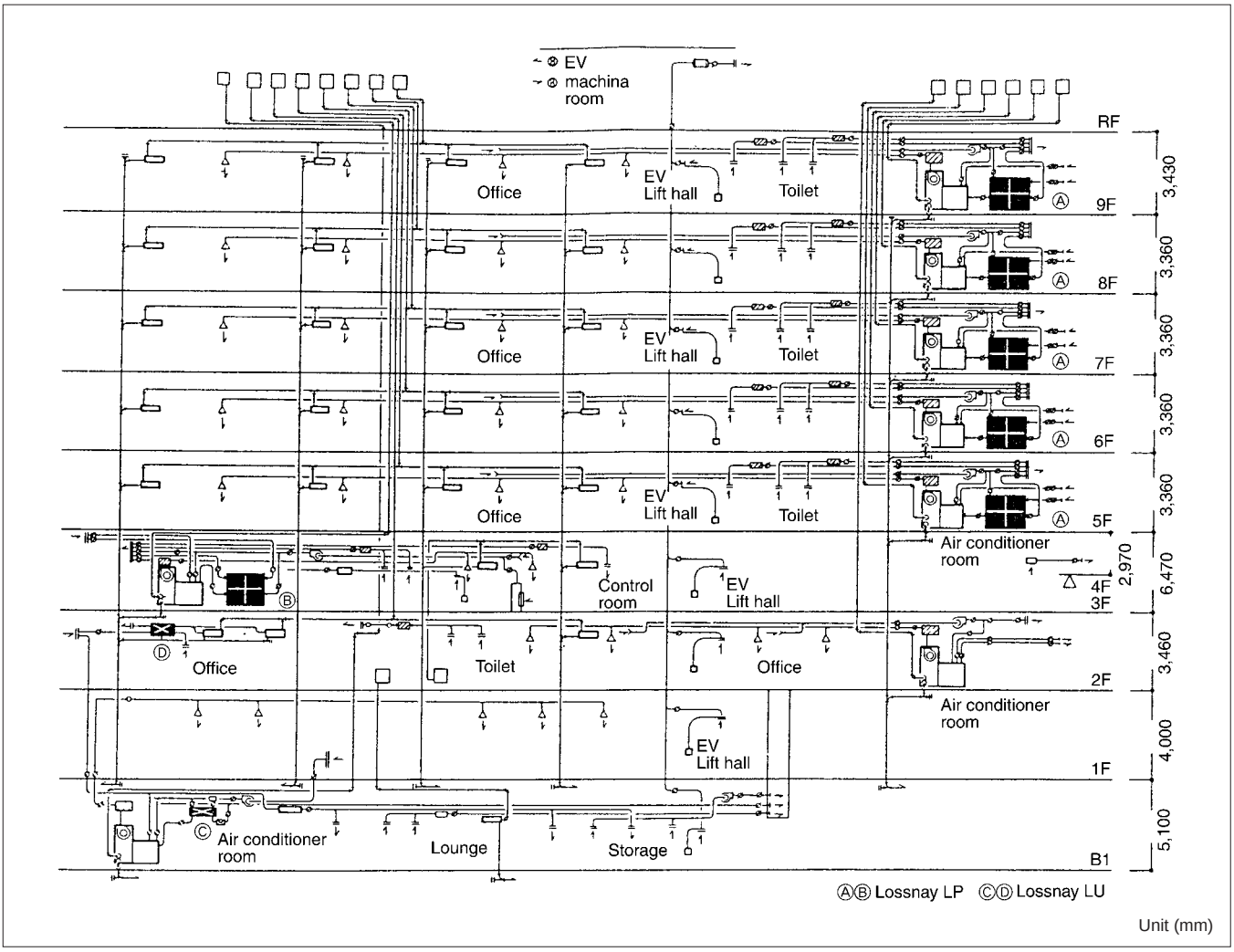

3.4 Effect

(1) Management in tenant units is clear and simple.

(2) Maintenance is simple as the maximum centralization can be planned while having independent tenants.

(3) As ventilation units are considered per floor, there are few openings on the outer wall, making designing of the outer wall more simple.

(4) Outdoor air cooling is possible while ventilating.

4. Urban Small-Scale Building

4.1 System plan points

This system is based on effectively using available space within a limited area by installing the air conditioner and ventilator in available excess space.
For this application, the air flow must be considered for the entire floor with the ventilator installed in the ceiling space.

Setting outline

- Application : Office
- Building form : RC (Reinforced Concrete)
- Total floor space : 552 m^2 (B1 to 5F)
- Application per floor : B1: Parking area
  GF to 5F: Office
- Air conditioning : Package air conditioner
- Ventilation : Ceiling embedded-type and cassette-type Lossnay, straight centrifugal fan, duct ventilation fan.

4.2 Current topics

(1) Three sides of the building are surrounded by other buildings, and windows cannot be installed. (Dependency on mechanical ventilation is high.)

(2) Ample fresh outdoor air cannot be supplied. (Generally, only Class 3 ventilation (forced exhaust) is possible.)

(3) If the exhaust in the room is large, odors from the toilet, etc., flow into the room.

(4) Humidification during winter is not possible.

GF layout **1F to 5F layout**

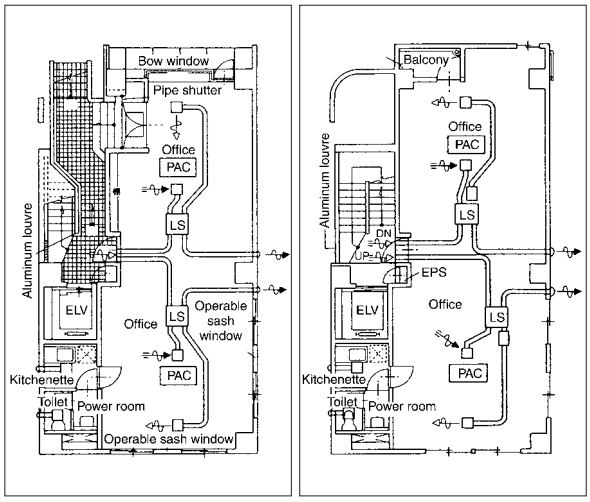

PAC : Package air conditioner
LS : Lossnay

4.3 Plan details

(1) Air conditioning
- Space efficiency and comfort during cooling/heating is improved with ceiling embedded cassette-type package air conditioner.

(2) Ventilation
- Room
- Salon corner

} Entire area is ventilated by installing several ceiling embedded-type Lossnay units.
Humidification is possible by adding a humidifier.
(Outdoor air is supplied to the toilet and kitchenette by setting the selection switch on the Lossnay unit for supply to the extra-high notch.)

- Conference room
- Board room

} Area is independently ventilated by installing a ceiling embedded-type or cassette-type Lossnay in each room.

- Toilet, powder room
- Kitchenette

} Area is exhausted with straight centrifugal fan or duct ventilation fan.
(An adequate exhaust volume can be obtained by taking in outdoor air, with the toilet being ventilated constantly.)

- Position of air intake/exhaust air outlets on outer wall
  The freshness of the outdoor air taken in by the Lossnay is important, thus considering that the building is surrounded by other buildings, the intake and exhaust ports must be separated as far as possible.

4.4 Effect

(1) Accurate ventilation is possible with Class 1 ventilation (forced simultaneous air intake/exhaust) using the Lossnay.

(2) Outdoor air supply to the toilet and kitchenette is possible with the Lossnay, and accurate ventilation is possible even in highly sealed buildings.

(3) Flow of odors can be prevented with constant ventilation using an adequate ventilation volume.

(4) Humidification is possible by adding a simple humidifying unit to the Lossnay.

5. Hospitals

5.1 System plan points

The principle of ventilation in hospitals requires adequate exhausting from the generation site and ensuring a supply of ample fresh air. An appropriate system would be an independent ventilation system with Class 1 ventilation (forced simultaneous air intake/exhaust).
The fan coil and package air conditioning are used according to material and place, and the air conditioned room is ventilated with the ceiling embedded-type Lossnay. The toilet and kitchenette, etc., are ventilated with a straight centrifugal fan.

Setting outline

- Building form : RC (Reinforced Concrete)
- Total floor space : 931 m^2 (GF to 2F)
- Application per floor : GF : Waiting room, diagnosis rooms, surgery theatre, director room, kitchen
  1F : Patient rooms, nurse station, rehabilitation room, cafeteria
  2F : Patient rooms, nurse station, head nurse room, office
- Air conditioning : Fan coil unit, package air conditioner
- Ventilation : Ceiling embedded-type Lossnay, straight centrifugal fan

5.2 Current topics

(1) Prevention of in-hospital transmission of diseases
(Measures meeting needs for operating rooms, diagnosis rooms, waiting rooms and patient rooms are required.)

(2) Adequate ventilation for places where odors are generated
(Measures to prevent odors from toilets from flowing to other rooms are required.)

(3) Shielding of external noise
(Shielding of noise from outside of building and noise from adjacent rooms and hallway is required.)

(4) Assurance of adequate humidity

(5) Energy conservation

5.3 Plan proposals

(1) Air conditioning

- Centralized heat source control using a fan coil for the general system allows efficient operating time control and energy conservation.
- 24-hour system using a package air conditioner for special rooms (surgery theatre, nurse station, special patient rooms, waiting room) is the most practical.

(2) Ventilation

- **Hall system**
  Independent system using centralized control with LP Lossnay or independent system with installation of ceiling suspended-type Lossnay
- **Surgery theatre**
  Combination use of LP Lossnay and package air-conditioner with HEPA filter on room supply air outlet.
- **Diagnosis rooms and examination room**
  Patient rooms
  Nurse stations
  Independent ventilation for each room using ceiling suspended/ embedded-type Lossnay.
  - Integral system with optional humidifier possible for required rooms.
  - Positive/negative pressure adjustment, etc., is possible by setting main unit selection switch to extra-high notch (25R, 50R models) according to the room.
- **Toilet/kitchenette**
  Straight centrifugal fan or duct ventilation fan
- **Storage/linen closet**
  Positive pressure ventilation fan or duct ventilation fan
  The outdoor air is supplied from the hallway ceiling with the straight centrifugal fan, and is distributed near the air conditioner after the air flow is reduced.
- **Kitchen**
  Exhaust with negative pressure ventilation fan or straight centrifugal fan. Outdoor air is supplied with the straight centrifugal fan.
- **Machine room**
  Exhaust with positive pressure ventilation fan.

GF layout

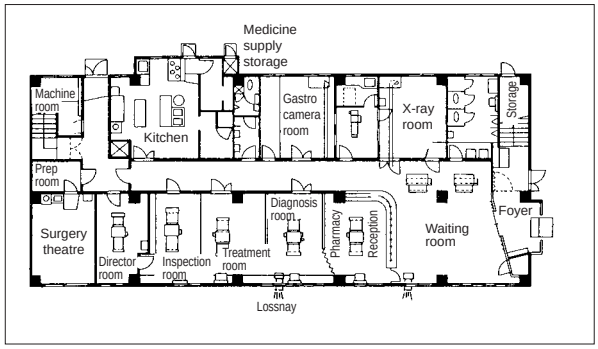

1F layout

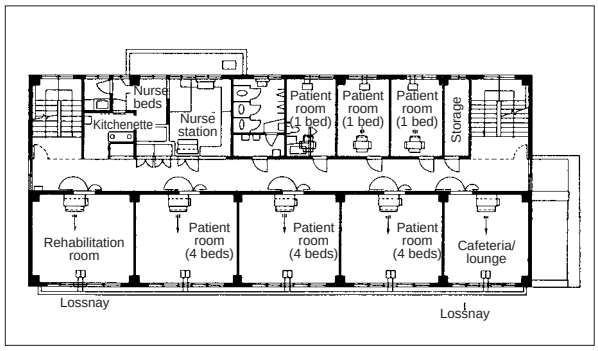

2F layout

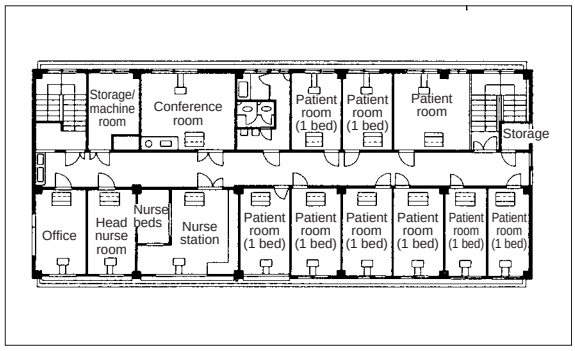

5.4 Effect

(1) The following is possible by independently ventilating the air-conditioned rooms with the Lossnay:
- Transmission of diseases can be prevented by shielding the air between rooms.
- Infiltration of outside noise can be prevented with the Lossnay Core's soundproof properties.
- As outdoor air does not need to be taken in from the hallway, the door can be sealed, shutting out hallway noise.
- Humidification is possible by adding a humidifier.

(2) By exhausting the toilet, etc., and supplying outdoor air to the hallway:
- Flowing of odors to other rooms can be prevented.

6. Schools

6.1 System plan points

A comfortable environment in classrooms is necessary to improve the children and students' desire to study.
Schools near airports, railroads and highways have sealed structures to soundproof the building, and thus air conditioning and ventilation facilities are required. This is also true for schools in polluted areas such as industrial districts.
At university facilities which have a centralized design to efficiently use land and to improve the building functions, the room environment must also be maintained with air conditioning.

6.2 Current system details and problem points

(1) Mainly single duct methods, fan coil unit methods, or package methods are used for cooling/heating, but the diffusion rate is still low, and water-based heaters are still the main source of heating.

(2) The single duct method is difficult to control according to the usage state, and there are problems in running costs.

(3) Rooms are often ventilated by opening the windows or using a ventilation gallery, where although this provides ample ventilation volume it may create a problem of infiltration of outside noise.

6.3 Building outline

Total floor space : 23,000 m^2
Building outline : Prep school (high school wing)
Memorial hall wing
Library wing
Main management wing

6.4 Plan details

(1) To pursue comfort, save energy and space, an air conditioning and ventilation system using a ceiling embedded-type fan coil unit and ceiling embedded-type Lossnay was applied.

(2) Automatic operation using a weekly program timer was applied, energising when the general classrooms and special classrooms are to be used.

(3) By using a ventilation system with a total heat recovery unit, energy is saved and soundproofing is realised.

Classroom layout

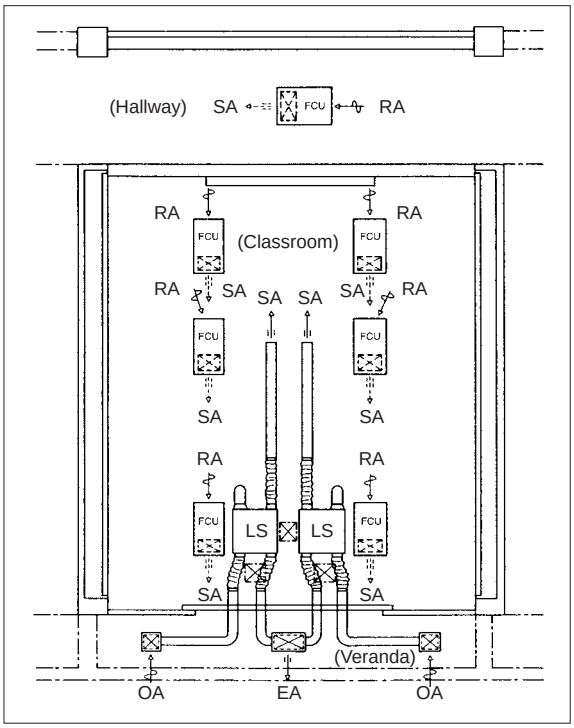

6.5 Conditions for air-conditioning in schools

(1) Zoning according to application must be possible.

(2) Response to load fluctuations must be swift.

(3) Ventilation properties must be good.

(4) The system must be safe and rigid.

(5) Expansion of the facility must be easy.

(6) Installation on existing buildings must be possible.

(7) Installation and maintenance cost must be low.

6.6 System trends

(1) It is believed that environmental needs at schools will continue to progress towards high quality, and various factors such as temperature/humidity, noise, natural lighting, and colour must be considered at the design stages. Important topics are air conditioning, ventilation and soundproofing.

(2) Independent heating using a centralized control method is mainly applied when the air conditioner is for heating only. For cooling/heating, a combination of a fan coil method and package-type is the main method used.

(3) Highly accurate Class 1 ventilation is applied for the ventilation method, and the total heat recovery unit is mainly used in consideration of the energy saved during air conditioning and the high soundproofing properties.

7. Hotels (convention halls, wedding halls)

7.1 System plan points

Hotels in Japan often have functions such as a resort hotel at tourist spots, convention hotel with conference and banquet halls, and business hotels for short-term stays. These are all labeled as hotels, and often, more importance is laid on the wedding, convention and banquet halls, etc.
This is because air conditioning systems in these places must have a ventilation treatment system that can handle extremely large fluctuations in loads, tobacco smoke and removal of odors.

7.2 Current systems and problem points

CO and CO_2 permissible values, removal of odors, and tobacco smoke are often considered as standards for ventilation and often the ventilation is set at 30 m^3/h·person to 35 m^3/h·person. Several outdoor air introduction-type package air conditioners or air handling unit facilities are often used, but, these are greatly affected by differences in capacity, ratio of smokers and length of stay.

7.3 Plan details

This proposed plan has two examples with the use of a Lossnay as a ventilator for total heat recovery in the air conditioned conference room, and the use of several outdoor air type package air-conditioners for convention and banquet halls.

A) Conference room

Heat recovery ventilation is executed with constant use of the Lossnay unit, but when the number of persons increases suddenly and the CO_2 concentration reaches a set level (for example, 1,000 ppm in the Building Management Law), a separate centrifugal fan operates automatically. This system can also be operated manually to rapidly remove smoke and odors.

B) Convention and banquet halls

Basically, this system is composed of several outdoor air introduction-type package air conditioners and straight centrifugal fans for ventilation. However, an inverter controller is connected to the centrifugal fan so that it is constantly at 50 percent of the operation state, allowing fluctuations in ventilation loads to be handled. By interlocking with several package air-conditioners, detailed handling of following up the air condition loads in addition to the ventilation volume is possible.
Systems using Lossnay are also possible.

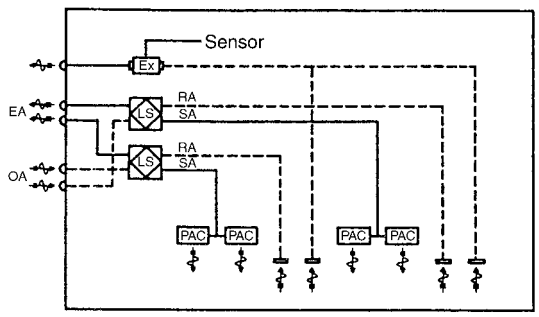

LS : Lossnay
EX : Centritugal fan
PAC: Package air conditioner

Conference room ventilation system diagram

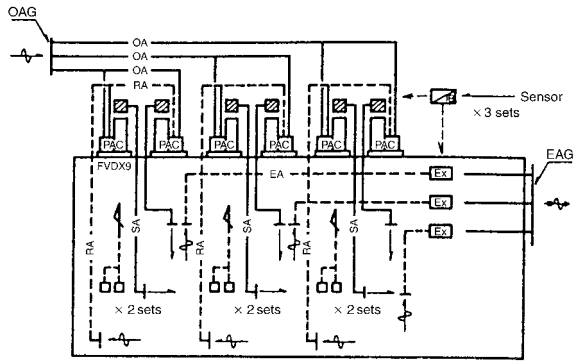

EX : Centritugal fan
PAC: Package air conditioner
IB : Inverter controller

Convention and banquet hall ventilation system diagram

7.4 System trends

The load characteristics at hotels is complex compared to general buildings, and are greatly affected by the bearing, time, and operation state as mentioned above. Further to this, the high ceilings in meeting rooms and banquet halls, requires preheating and precooling to be considered. Further research on management and control systems and product development will be required in the future to pursue even further comfortable control within these spaces.

8. Public Halls (combination facilities such as day-care centres)

8.1 System plan points

Air conditioning and ventilation facilities for buildings located near airports and military bases, etc., that require soundproofing, have conventionally been of the centralized method. However, independent dispersed air conditioning and ventilation has been demanded due to the need for operation in zones, as well as for energy conservation purposes. This system is a plan for these types of buildings.

Setting outline

- Building form : Above ground 2, Total floor space: 385 m^2
- Application : GF Study rooms (2 rooms), office, day-care room, lounge
  1F · · · · · Meeting room
- Air conditioning : GF Air-cooling heat pump chiller and fan coil unit
  1F · · · · · Air-cooling heat pump package air conditioner
- Ventilation : Ceiling embedded Lossnay

8.2 Conventional system and topics

(1) Conventional systems have used centralized methods with air handling units, and air conditioning and ventilation were generally performed together.

(2) Topics
  1) Special knowledge is required for operation, and there are problems in response to the users' needs.
  2) When the centralised method is used, the air even in rooms that are not being used is conditioned, increasing running costs unnecessarily.
  3) Machine room space is necessary.
  4) Duct space is necessary.

8.3 Plan details

(1) Air conditioning facilities

1) Small rooms : Air-cooling heat pump chiller and fan coil unit combination
2) Meeting rooms : Single duct method with air-cooling heat pump package air conditioner

(2) Ventilation facilities

1) A ceiling embedded-type Lossnay is used in each room, and a silence chamber, silence-type supply/return grille, silence duct, etc. is incorporated on the outer wall to increase the total soundproofing effect.

8.4 Effect

(1) Operation is possible without special knowledge, so management is easy.

(2) Operation is possible according to each room's needs, and is thus energy-saving.

(3) Soundproof ventilation is possible with the separately installed ventilators.

(4) Energy saving ventilation is possible with the heat recovery ventilation.

(5) Space saving with the ceiling embedded-type.

Soundproofing standards →	Soundproofing effect
High pressure level difference 30 dB or more	Study room: 34.0 dB Rest room : 47.2 dB

GF layout

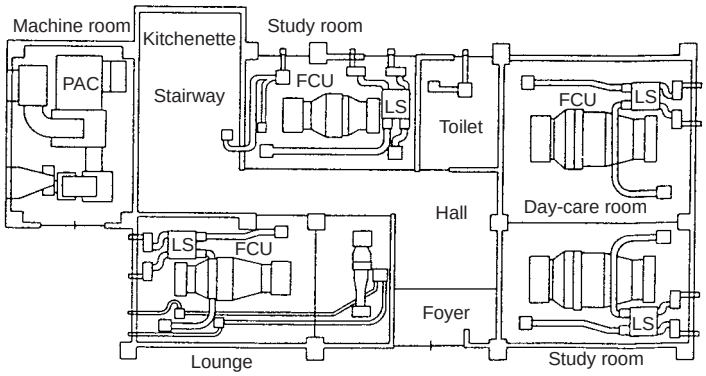

1F layout

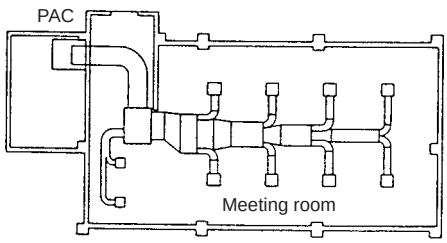

CHAPTER 7
Installation Considerations

1. LGH-Series Lossnay Ceiling Embedded-Type (LGH-RX4 Series)

LGH-15 · 25 · 35 · 50 · 65 · 80 · 100RX4 models

■ **Installation diagram**

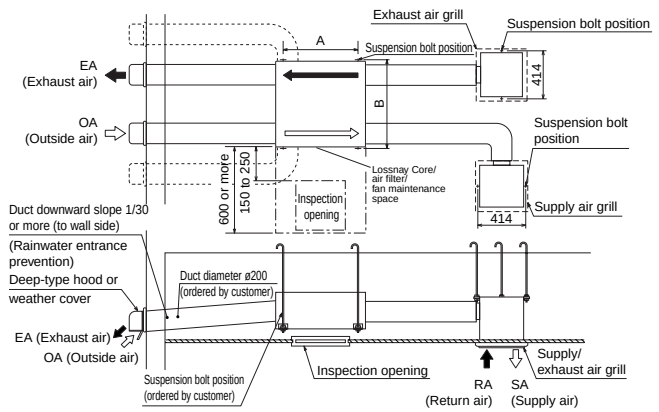

Unit (mm)

- Always leave inspection holes (□ 450 or □ 600) on the air filter and Lossnay Core removal side.
- Always insulate the two ducts outside the room (intake air and exhaust air ducts) to prevent frosting.
- It is possible to change the direction of the outside air ducts (OA and EA side).
- It is possible to attach a suspension bolt.
- Do not install the vent cap or round hood where it will come into direct contact with rain water.

Air volume (m^3/h)	Model	Dimension	
		A	B
150	LGH-15RX4	700	641
250	LGH-25RX4	700	765
350	LGH-35RX4	790	906
500	LGH-50RX4	790	1,048
650	LGH-65RX4	810	985
800	LGH-80RX4	1,030	1,036
1000	LGH-100RX4	1,030	1,263

LGH-150 · 200RX4

■ **Installation diagram**

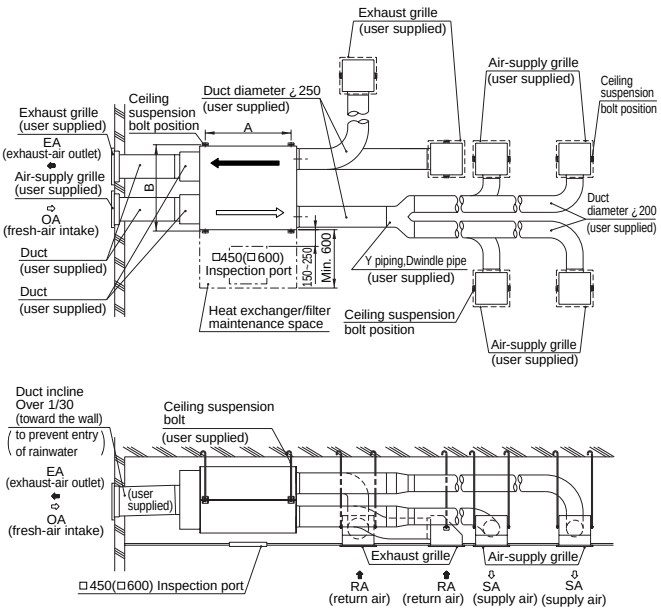

Unit (mm)

- Always leave inspection holes (□ 450 or □ 600) on the air filter and Lossnay Core removal side.
- Always insulate the two ducts outside the room (intake air and exhaust air ducts) to prevent frosting.
- If necessary, order a weather cover to prevent rain water from direct contact or entering the unit.

Air volume (m^3/h)	Model	Dimension	
		A	B
1500	LGH-150RX4	1,030	1,046
2000	LGH-200RX4	1,030	1,273

- Ducting

Indoor

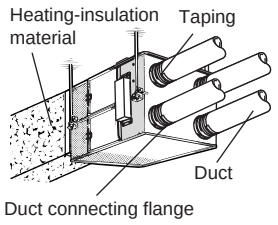

Should secure with airtight tape to prevent air leakage.

Outdoor

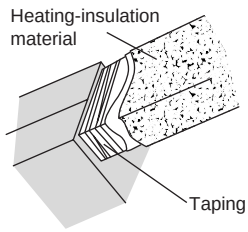

Should secure with airtight tape to prevent air leakage. Cover duct with insulation foam prevent condensation.

(1) The ceiling embedded-type: 150 · 250 · 350 · 500 · 650 · 800 · 1000 · 1500 and 2000 m^3/h types are available. Select an adequate model according to the room size, air volume for the application and noise levels.

(2) The LGH-RX4 types have an extra-high notch. This setting is for when a long duct is used or when a large air volume is required. The positive and negative pressures of the room can also be adjusted with this.

LGH-15 · 25 · 35 · 50 · 65 · 80 · 100RX4

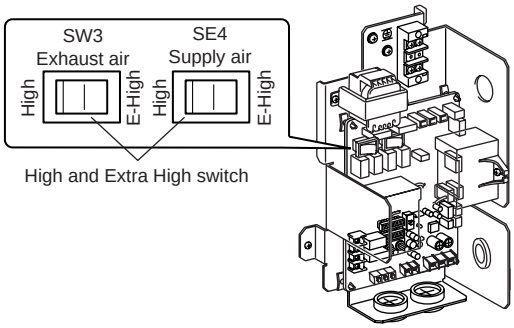

LGH-150 · 200RX4

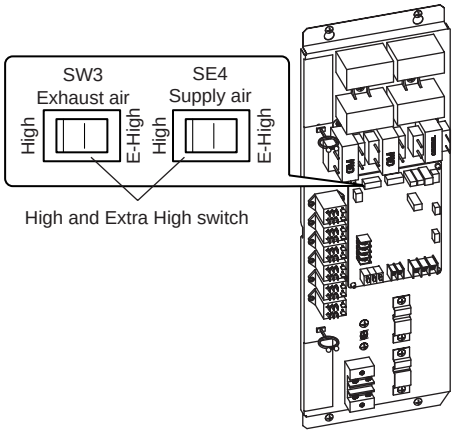

Multi-ventilation mode setting (Refer to Technical Manual (controls) page 70)

RX4 type is available to make 9 fan speed setting patterns of SA and EA fans for High notch.

RX3 type have only 4 fan speed patterns for High.

Setting on PCB dip switch table.

	Switch for High and E-High					Remote Controller				Model comparison		
	Dip switch		Switch for High and E-High			High		Low		RX4	RX3	
	SW2-4	SW2-5	SW4	SW3		SA	EA	SA	EA			
Power supply / exhaust mode	Off	Off	E-High	E-High	→	E-High	E-High	Low	Low	○	○	
	Off	Off	High	High	→	High	High	Low	Low	○	○	*
	Off	Off	High	E-High	→	High	E-High	Low	Low	○	○	
	Off	Off	E-High	High	→	E-High	High	Low	Low	○	○	
Power supply mode (Fixed Exhaust fan at Low mode)	Off	On	E-High	Not Available	→	E-High	Low	Low	Low	○	×	
	Off	On	High	Not Available	→	High	Low	Low	Low	○	×	
Power Exhaust mode (Fixed Supply fan at Low mode)	On	Off	Not Available	E-High	→	Low	E-High	Low	Low	○	×	
	On	Off	Not Available	High	→	Low	High	Low	Low	○	×	
Energy saving ventilation mode Fixed Both of fans at Low Mode	On	On	Not Available	Not Available	→	Low	Low	Low	Low	○	△ (SW2-4Off, SW2-5On)	

*Factory setting

1.1 Selecting Duct Attachment Direction

You can choose between two directions for the outside duct (OA, EA) piping direction, to improve construction.

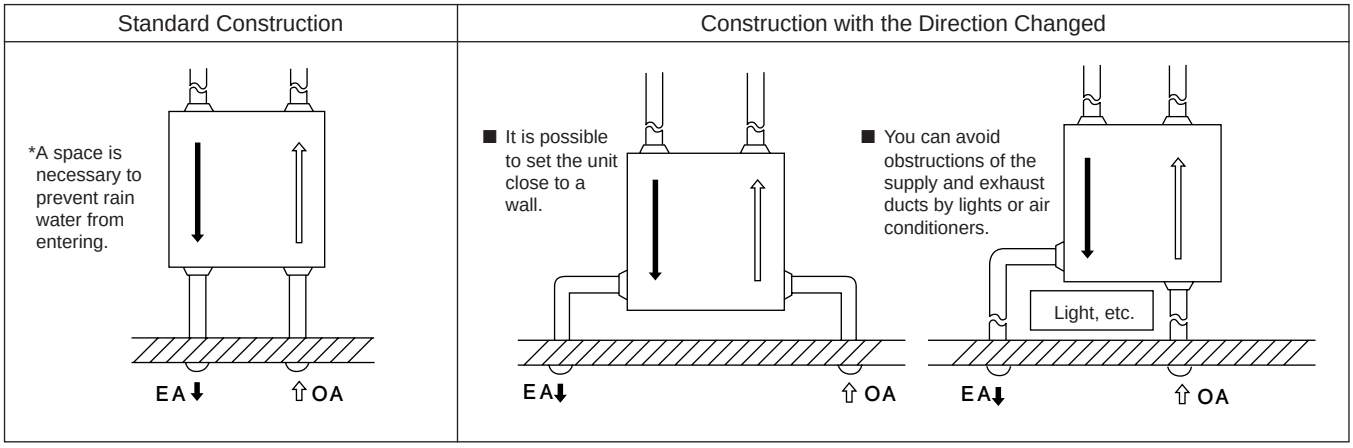

1.2 Installation and maintenance

(1) Always leave an inspection hole (□450) on the filter and Lossnay Core removal side.

(2) Always insulate the two ducts outside the room (intake air and exhaust air ducts) to prevent frosting.

(3) Enforce measures to prevent rain water from entering.
- Apply a slope of 1/30 or more towards the wall to the two ducts outside the room (intake air and exhaust air ducts).
- Do not install the vent cap or round hood where it will come into direct contact with rain water.

(4) Use the optional parts “control switch” (Ex. PZ-41SLB, etc.) for the RX4-type.
A centralized controller can also be used.

1.3 Installation applications

(1) Combined installation of two units

The main unit’s supply outlet and suction inlet and the room side and outdoor side positions cannot be changed. However, the unit can be turned over, and installed as shown below. (This is applicable when installing two units in one classroom, etc.)

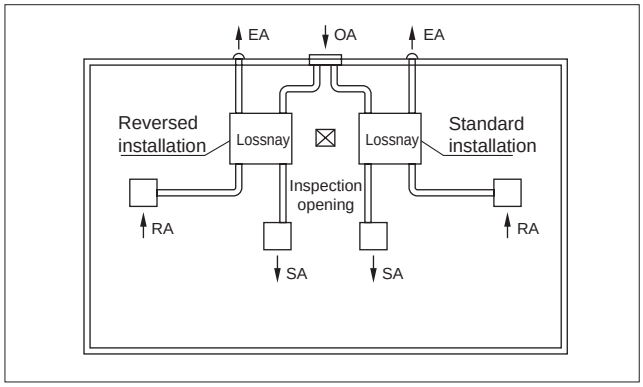

(2) System operation with air conditioner

Air conditioning systems with independent dispersed multiple unit air-conditioners are increasing due to merits such as improved controllability, energy conservation and space saving.
For these types of air conditioning systems, combined operation of the dispersed air conditioners with the Lossnay, is possible.

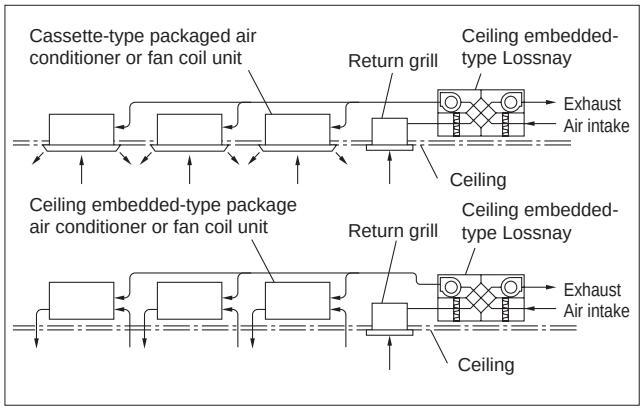

2. Building Lossnay Unit Horizontal-type (LU-500)

2.1 Main unit installation surface diagram (anchor bolt installation position)

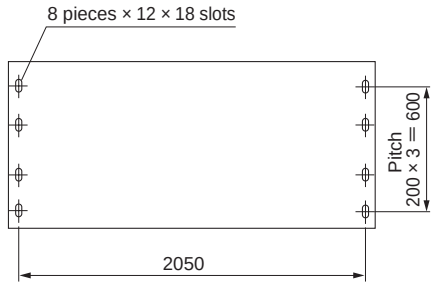

Unit (mm)

2.2 Maintenance space

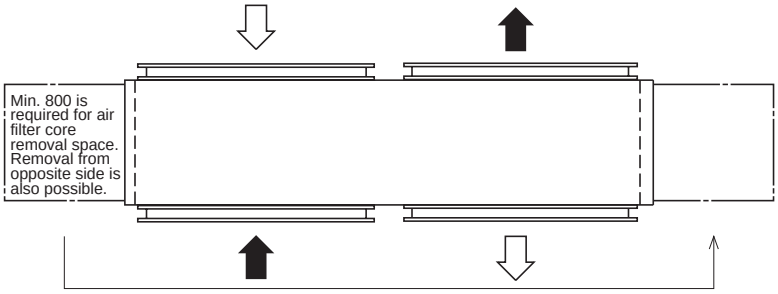

Unit (mm)

2.3 Dimensions and flange dimensions

LU-500

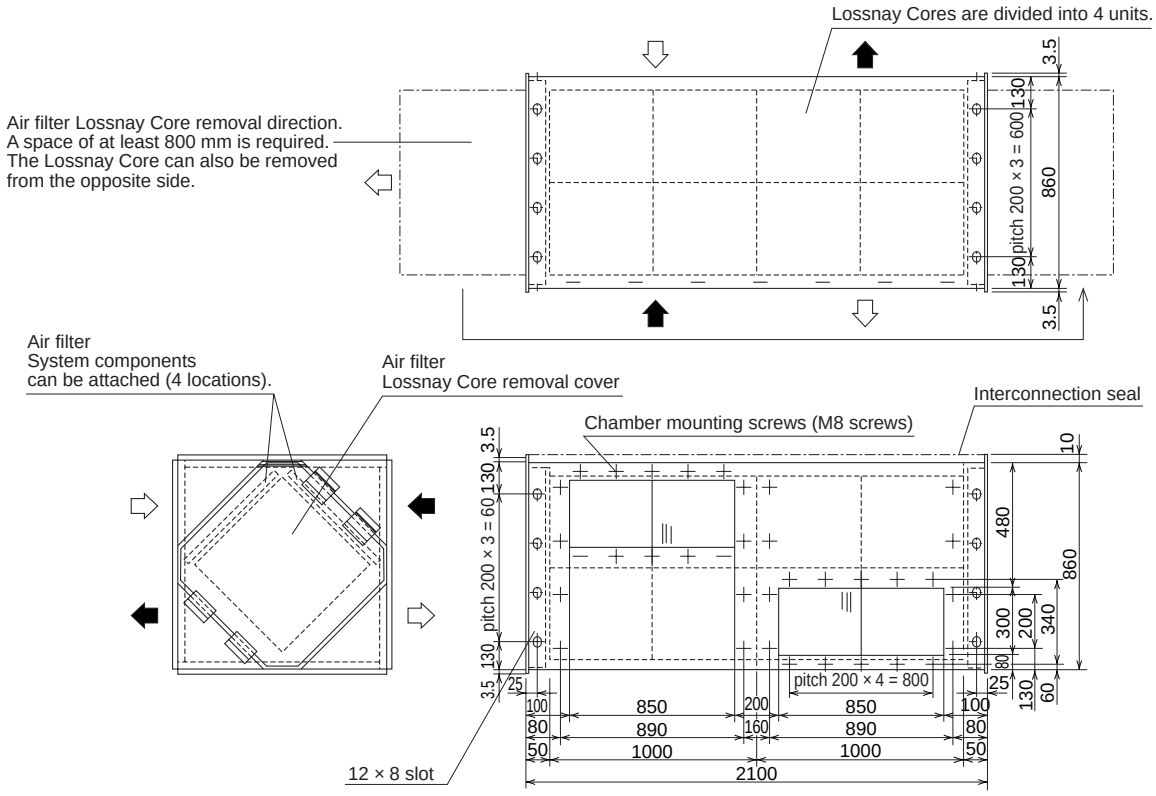

Unit (mm)

LU-502 · 503 · 504 · 505 Unit (mm)

	A	B	C	D	E
LU-502	1730	1170	1250	1210	Pitch 100 × 10 = 1000
LU-503	2600	2040	2120	2080	Pitch 100 × 20 = 2000
LU-504	3470	2910	2990	2950	Pitch 100 × 27 = 2700
LU-505	4340	3780	3860	3820	Pitch 100 × 36 = 3600

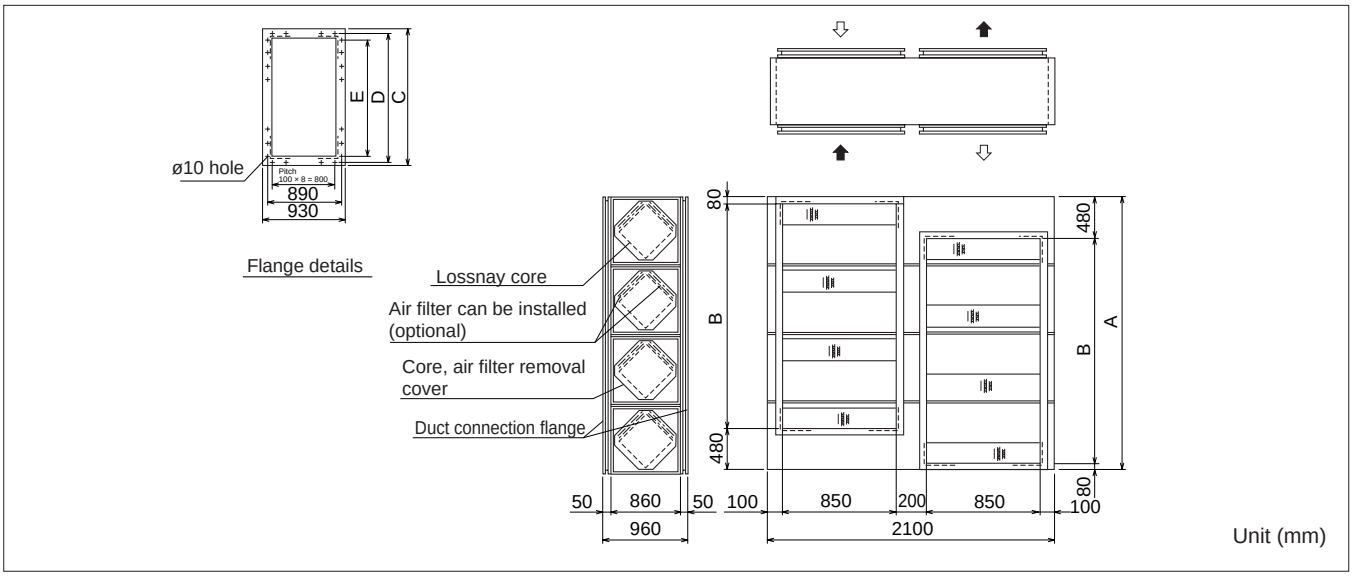

2.4 Transportation and installation

The product is shipped in the fully assembled state. Transport the unit gently and do not apply shock or tilt the unit.

(1) Use eyebolts (or eyenuts) and rope when lifting the unit. Make sure that the rope can withstand the weight of the unit. Always use all four eyebolts, and fix the rope.
Adjust the rope length so that the angle between the rope and the unit is 45° or more.

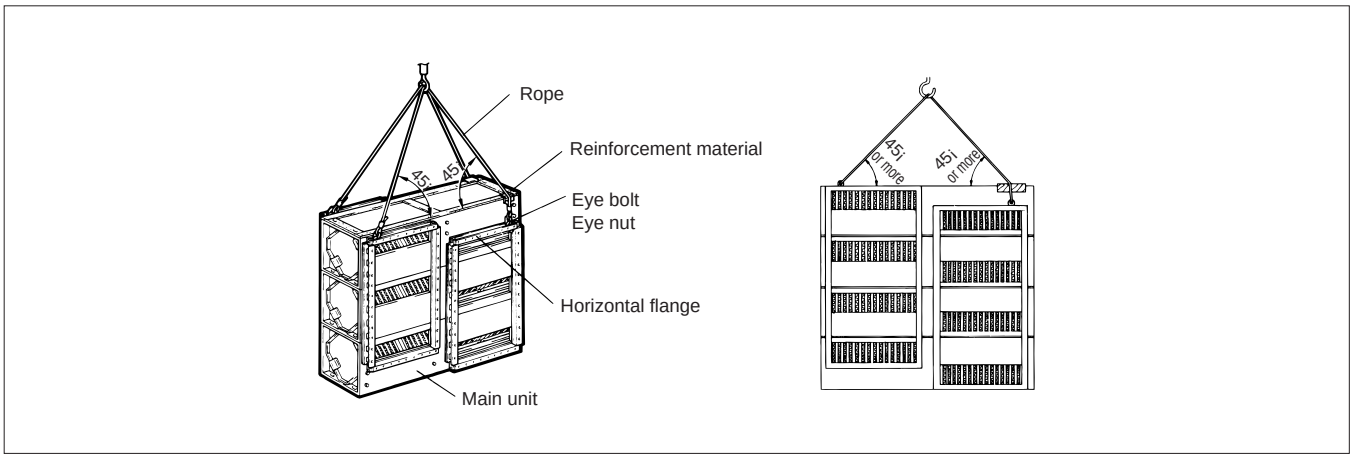

(2) Use filler plates to protect the panel so that the panel is not damaged by the rope during lifting.
(3) The unit will be damaged if the rope directly contacts the unit.
(4) The foundation must be made of concrete. The concrete foundation must be level and have ample strength.
(5) Install the unit perpendicularly to the foundation and securely fix the unit with anchor bolts.
(6) Install the unit where rain water will not come into contact, and where rain water will not infiltrate the unit from the ducts.

⚠ Caution

This unit has indoor specifications and cannot be installed in sites where it will come into contact with rain water or in high temperature, high humidity locations.

CHAPTER 8
Filtering for Freshness

1. Necessity of Filters

Clean air is necessary for humans to live a comfortable and healthy life. Besides atmospheric pollution that has been generated with the development of modern industries and the growth in the use of automobiles, air pollution in air-tight room has progressed to the point where it adversely affects the human body, and is now a major problem.
Hay fever is now a symptom often seen in the spring and demands for preventing pollen from entering rooms are increasing.

2. Data Regarding Dust

The particle diameter of dust and applicable range of filters are shown in Table 1, and representative data regarding outdoor air dust concentrations and indoor dust concentrations is shown in Table 2.

Table 1 Aerosol particle diameters and applicable ranges of various filters

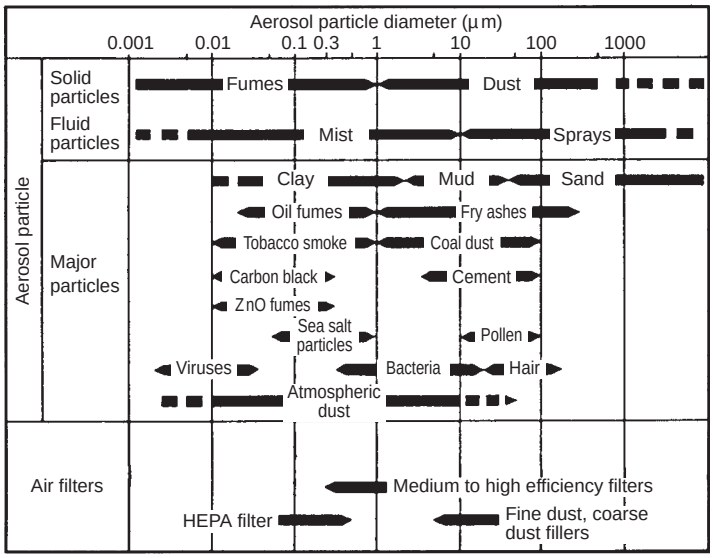

Table 2 Major dust concentrations

Type	Reference data	
Outdoor air floating dust concentration	Large city	0.1 - 0.15 mg/m^3
	Small city	0.1 mg/m^3 or less
	Industrial districts	0.2 mg/m^3 or more
Indoor dust concentration	General office	10 mg/h per person
	Stores (product vending stores)	5 mg/h per person
	Applications with no tobacco smoke	5 mg/h per person

Remarks:

1. The core diameter of outdoor air dust is said to be 2.1 µm, and the 11 types of dust (average diameter 2.0 µm) as set by JIS Z 8901 as performance test particles are employed.
2. Dust in office rooms is largely caused by smoking, and the core diameter is 0.72 µm. The 14 types of dust (average 0.8 µm) as set by JIS Z 8901 as performance test particles are employed.
3. The core diameter of dust generated in rooms where there is no smoking is approximately the same as outdoor air.
4. Smoking in general offices (as per Japan):
   Percentage of smokers : Approx. 70% (adult men)
   Average number of cigarettes : Approx. 1/person·h (including non-smokers)
   Smoking length of cigarette : Approx. 4 cm
   Amount of dust generated by one cigarette : Approx. 10 mg/cigarette

3. Calculation Table for Dust Collection Efficiency of Each Lossnay Filter

Filter type \ Measurement method / Tested dust		Applicable model	AFI Gravitational method	ASHRAE Colorimetric method	Certificate in EU	Countingh method (DOP method)		Application
			Compound dust	Atomspheric dust		JIS 14 types DOP 0.8 µm	DOP 0.3 µm	
Pre-filter	NP/400	Commercial Lossnay (LGH)	82%	8% - 12%	G3 (EU3)	5% - 9%	2% - 5%	Protection of heat recovery element
High efficiency filter	Model PZ-15RFM - 100RFM	Optional Part for model LGH-15RX4 - 200RX4	99%	65%	F7 (EU7)	60%	25%	Assurance of sanitary environment (According to Building Management Law)

3.1 High-Efficiency Filter (Optional Parts)

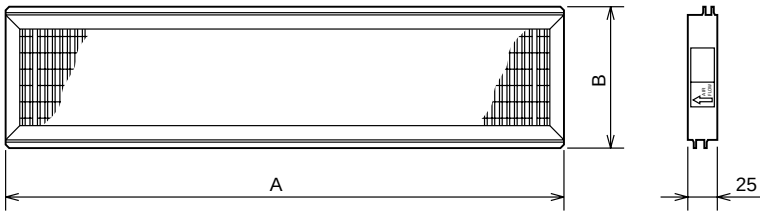

Model		PZ-15RFM	PZ-25RFM	PZ-35RFM	PZ-50RFM	PZ-65RFM	PZ-80RFM	PZ-100RFM
Dimension (mm)	A	554	330	395	466	429	448	561
	B	121	147	174	174	209	236	236
Number of filters perset		1	2	2	2	2	2	2

Note: This is one set per main body.

3.2 Pressure Loss

■ **Pressure Loss Characteristics**

PZ-15RFM

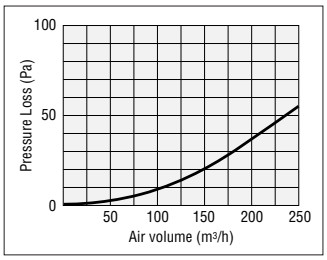

PZ-25RFM

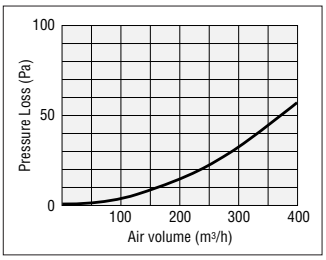

PZ-35RFM

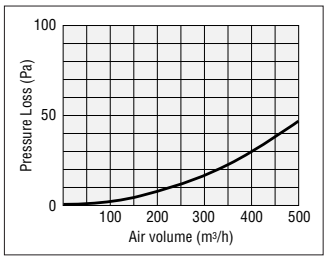

PZ-50RFM

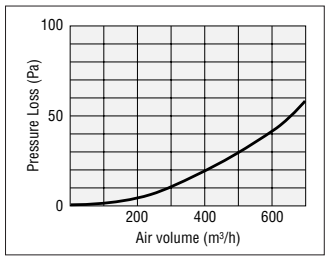

PZ-65RFM

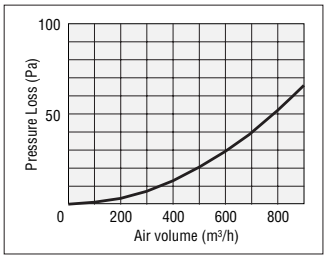

PZ-80RFM

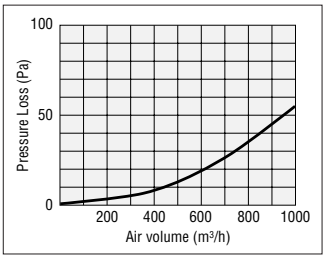

PZ-100RFM

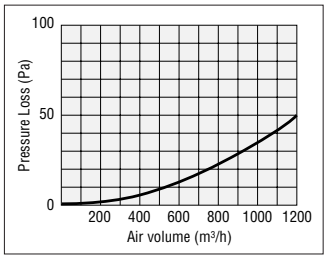

The ability of the filters used within the Lossnay units are shown below, expressed in terms of collection ratio (%).

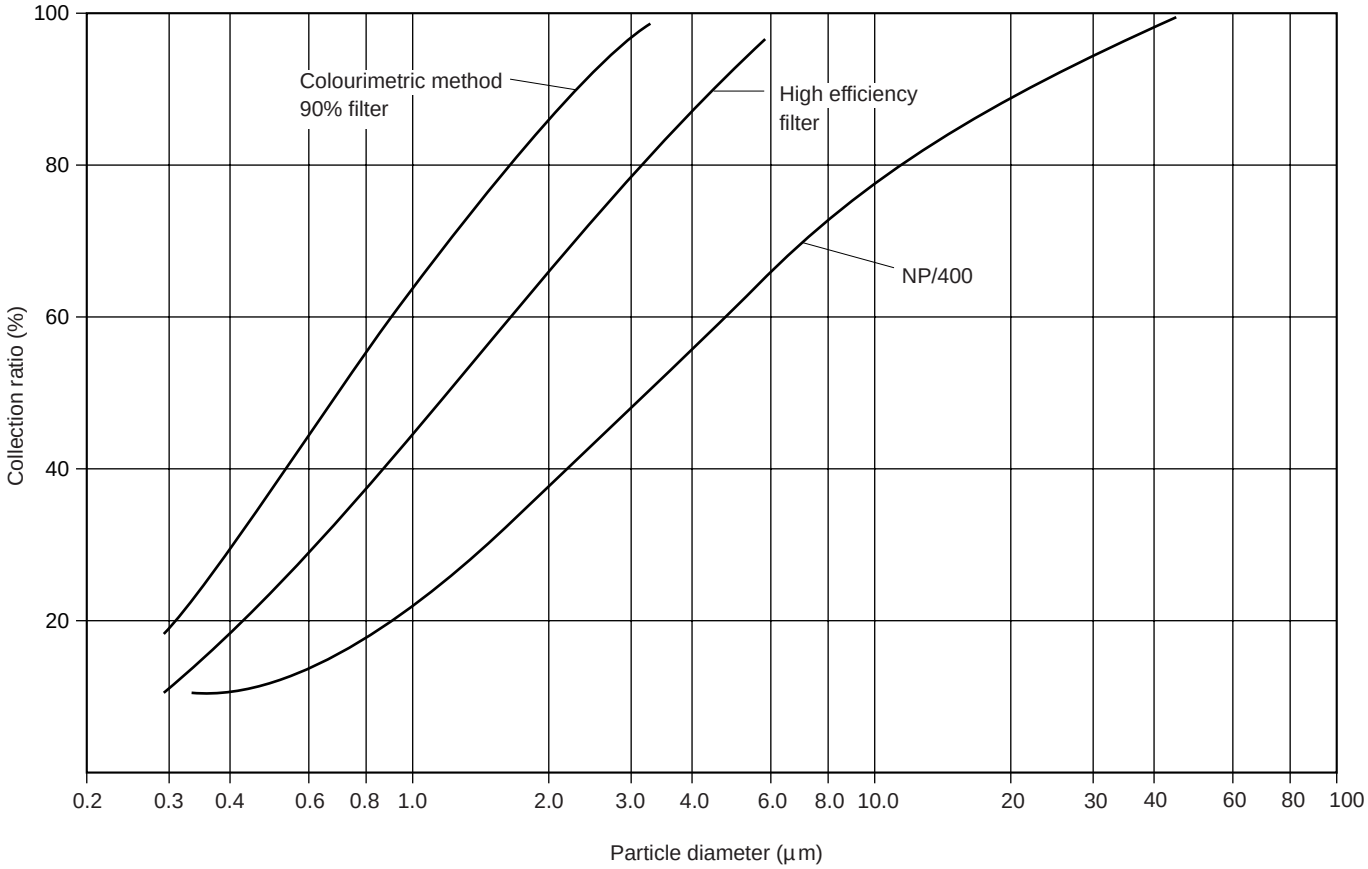

4. Comparison of Dust Collection Efficiency Measurement Methods

The gravitational, colorimetric and counting methods used for measuring dust collection efficiency each have differing features and must be used according to the application of the filter.

Test method	Test dust	Inward flow dust measurement method	Outward flow dust measurement method	Efficiency indication method	Type of applicable filters
AFI Gravitational method	Synthetic: • Dust on standard road in Arizona: 72% • K-1 carbon black: 25% • No.7 cotton lint: 3%	Dust weight measured beforehand	• Filter passage air volume measured • Weigh the dust remaining on the filter and compare	Gravitational ratio	Synthetic dust filters
NBS Colorimetric method	Atmospheric dust	Degree of contamination of white filter paper	Degree of contamination of white filter paper	Comparison of contamination of reduction in degree of contamination	Electrostatic dust percentage of (for air conditioning)
DOP Counting method	Diameter of dicoctyl-phthate small drop particles: 0.3 µm	Electrical counting measurement using light aimed at DOP	Same as left	Counting ratio	Absolute filter and same type of high efficiency filter
ASHRAE Gravitational method	Synthetic: • Regulated air cleaner fine particles: 72% • Morocco Black: 23% • Cotton linter: 5%	Dust weight measured beforehand	• Filter passage air volume measured • Weigh the dust remaining on the filter and compare	Gravitational ratio	Pre-filter Filter for air conditioning (for coarse dust)
ASHRAE Colorimetric method	Atmospheric dust	Degree of contamination of white filter paper	Degree of contamination of white filter paper	Comparison of percentage of reduction in degree of contamination	Filter for air conditioning (for fine dust) Electrostatic dust collector
Air filter test for air conditioning set by Japan Air Cleaning Assoc. (Colorimetric test)	JIS 11 types of dust	Degree of contamination of white filter paper	Degree of contamination of white filter paper	Comparison of percentage of reduction in degree of contamination	Filter for air conditioning
Pre-filter test set by Japan Air Cleaning Assoc. (Gravitational test)	JIS 8 types of dust	Dust weight measured beforehand.	• Filter passage air volume measured • Weigh the dust remaining on the filter and compare.	Gravitational ratio	Pre-filter
Electrostatic air cleaning device test set by Japan Air Cleaning Assoc. (Colorimetric test)	JIS 11 types of dust	Degree of contamination of white filter paper	Degree of contamination of white filter paper	Comparison of percentage of reduction in degree of contamination	Electrostatic dust collector

Gravitational method

This method is used for air filters which remove coarse dust (10 µm or more). The measurement method is determined by the gravitational ratio of the dust amount on the in-flow side and out-flow sides.

$$\text{Dust collection ratio} = \frac{\text{In-flow side dust amount} - \text{Out-flow side dust amount}}{\text{In-flow side dust amount}} \times 100\ (\%)$$

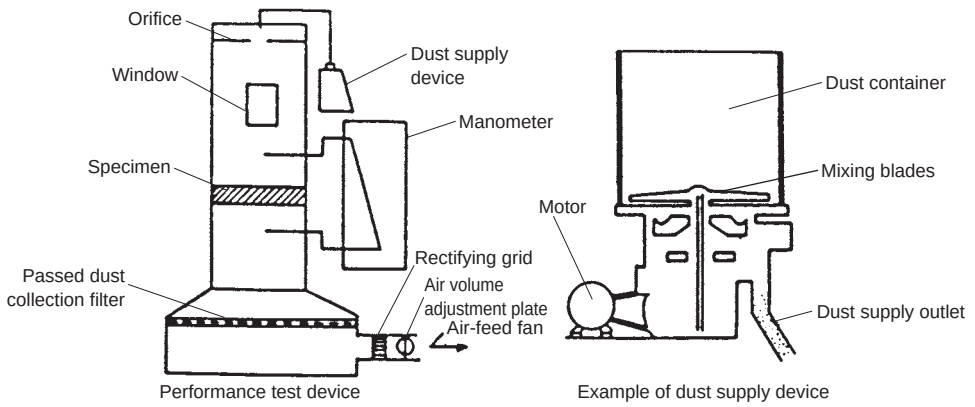

Colorimetric method

The in-flow side air and out-flow side air are sampled with a suction pump and passed though filtering paper. The sampled air is adjusted so that the degree of contamination on both filter papers is the same, and the results are determined by the sampled air volume ratios on both sides.

$$\text{Dust collection ratio} = \frac{\text{Out-flow side sampling amount} - \text{In-flow side sampling amount}}{\text{Out-flow side sampling amount}} \times 100\ (\%)$$

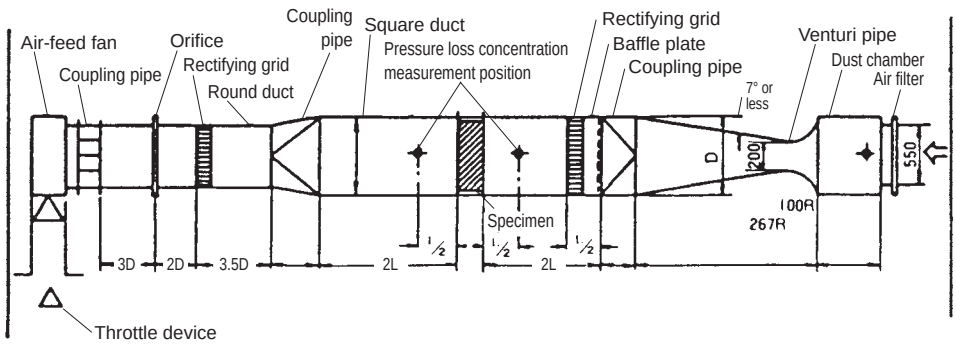

Unit (mm)

5. Calculation of Dust Concentration

An air conditioning system using the Lossnay is shown below. Using this diagram the level of dust concentration can be easily determined.

Dust concentration study diagram

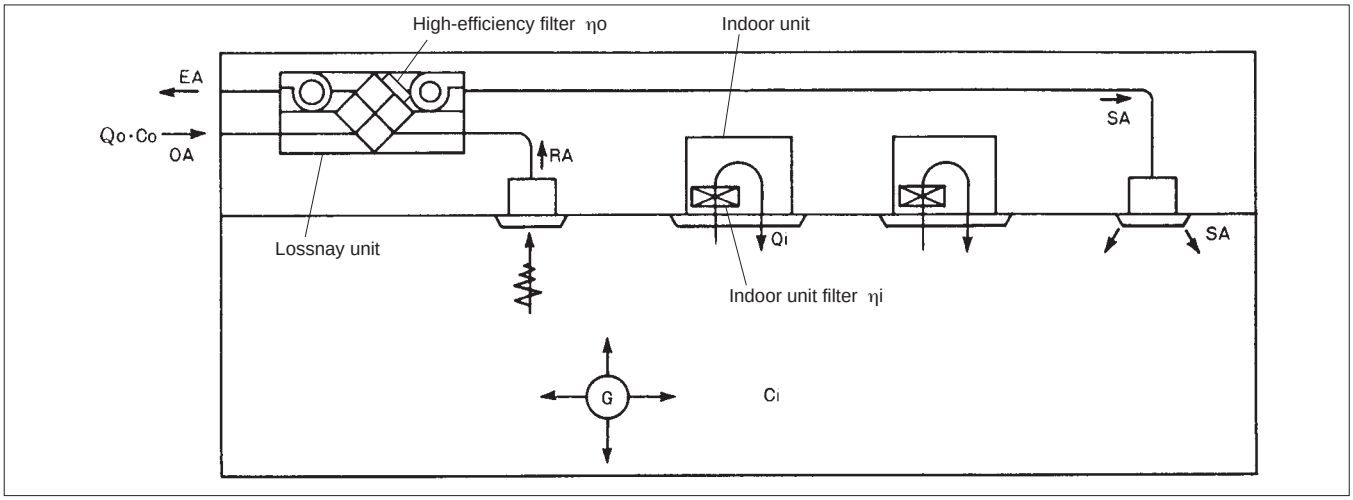

Q_o : Outdoor air intake amount (m^3/h)
Q_i : Indoor unit air volume (Total air volume of indoor unit) (m^3/h)
η_o : Filtering efficiency of humidifier with high efficiency filter % (colorimetric method)
η_i : Filtering efficiency of filter for indoor unit % (colorimetric method)
C_o : Outdoor air dust concentration (mg/m^3)
C_i : Indoor dust concentration (mg/m^3)
G : Amount of dust generated indoors (mg/h)

In this type of system, when the performance of each machine is known, the indoor dust concentration C_i may be obtained with the filtering performance of the filters, η_o and η_i, having been set to specific values as per manufacturer' s data. The following formula is used:

$$C_i = \frac{G + C_o Q_o (1 - \eta_o)}{Q_o + Q_i \ \eta_i}$$

Also, with the value of Ci and ho known, the efficiency of the indoor unit can be found using:

$$\eta_i = \frac{G + C_o Q_o (1 - \eta_o) - C_i Q_o}{C_i Q_i} \times 100$$

6. Certificate in EU

Pre-filter of LGH-RX4 series are certificated as G3(EU3), and High-efficiency filter of model PZ-15-100RFM are certificated as F7(EU7) under BS EN779 : 1993 / Eurovent 4/5 Filter Test.

Certificate No. C18070A/3

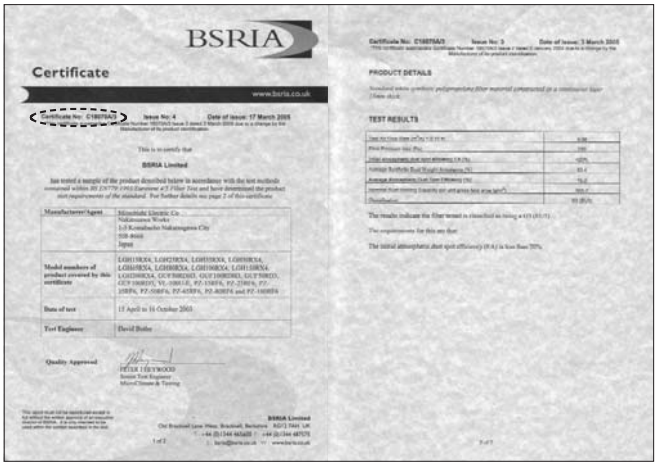

Certificate No. C18070B/2

[Calculation example]

The indoor dust concentration for the following types of design conditions with the above system shall be used in the following example.

● Outline of air conditioning

Air conditioning area	No. of persons in room	Outdoor air intake volume	Cooling capacity	Heating capacity
100 m^2 (Office)	20 persons	25 m^3/h per person × 20 persons = 500 m^3/h	15,700 W	13,374 W

● Equipment used

	Model	Heat recovery during cooling	Heat recovery during heating	Intake volume	Filtering efficiency
Lossnay with high efficiency filter	LGH-50RX4 + PZ-50RFM (with high efficiency filter)	3,710 W	3,907 W	500 m^3/h	65% (colorimetric method)

	Model	Cooling capacity	Heating capacity	Air volume	Filtering efficiency
Fan coil unit	LH-600CR-B3F (with high efficiency filter) 2 units	5,338 W	8,664 W	17 m^3/min	65% (colorimetric method)

Calculation

Intake volume	Q_o = 500 m^3/h
Indoor unit air volume	Q_i = 17 × 2 × 60 = 2,040 m^3/h
Filtering efficiency of humidifier with high efficiency filter	η_o = 65% (η_o' = 91% Particle diameter 2.1 μm*)
Filtering efficiency of filter for inside unit	η_i = 65% (η_i' = 57% Particle diameter 0.72 μm*)
Outdoor air floating dust concentration	C_o = 0.1 mg/m^3
Amount of dust generated in room	G = amount of dust generated per person × no. of persons in room = 10 mg/h·person × 20 persons = 200 mg/h

If the inside dust concentration Ci is found with the above, the following data is obtained:

$$C_i = \frac{200 + 0.1 \times 500\,(1 - 0.65)}{500 + 2{,}040 \times 0.65} \fallingdotseq 0.12 \text{ mg/m}^3 \ (\fallingdotseq 0.123 \text{ mg/m}^3{*})$$

The result is less than the dust concentration limit of 0.15 mg/m^3 set by the Building Standard Law of Japan. If the filtering efficiency of a filter for the indoor unit is obtained to set the inside dust concentration Ci to 0.15 mg/m^3, the following is obtained:

$$\eta_i = \left\{ \frac{200 + 0.1 \times 500\,(1 - 0.65) - 0.15 \times 500}{0.15 \times 2{,}040} \right\} \times 100 \fallingdotseq 47\% \ (\fallingdotseq 42\%{*})$$

This shows that the filtering efficiency of the indoor unit filter must be a minimum of 47% (colorimetric method).

* The result of a calculation using an average outdoor airborne particle diameter of 2.1 μm and an average indoor airborne particle diameter of 0.72 μm is shown.

CHAPTER 9
Service Life and Maintenance

1. Service Life

The Lossnay Core has no moving parts. This stationary design eliminates vibration troubles and also permits greater installation flexibility. In addition, chemicals are not used in the heat recovery system. Performance characteristics remain constant throughout the period of service.
A lifetime test, currently in progress and so far reaching 17,300 hours, has revealed no evidence of either reduction in heat recovery efficiency or deterioration of materials. If 2,500 hours is taken as the number of hours a conditioner is used during a year, 17,300 hours corresponds to about seven (7) years.
(This explanation is not a guarantee of the service life of the product.)

2. Cleaning the Lossnay Core and Pre-filter

The Lossnay Core should be cleaned with a vacuum cleaner at least once every 2 years. This will remove the dust that has accumulated at the surface and restore the functioning of the core to 98 to 100% of the original figure. A brush should not be used for cleaning because it may trap the dust in the core resulting in clogging.
The air filter on the intake side of the Lossnay Core should be cleaned at least once every year. After cleaning, reinstall the filter immediately.

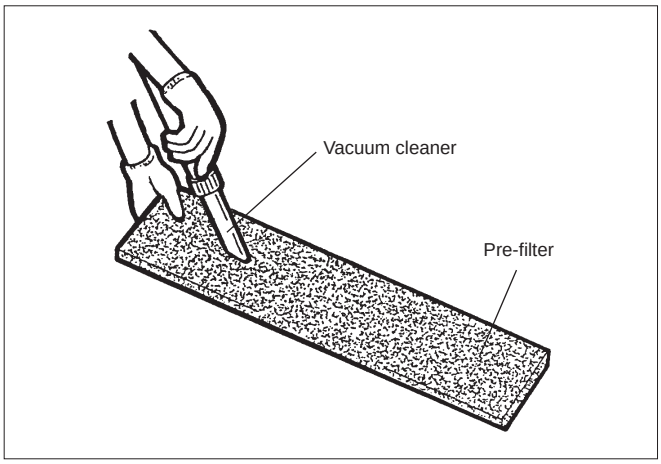

Do NOT wash in water.

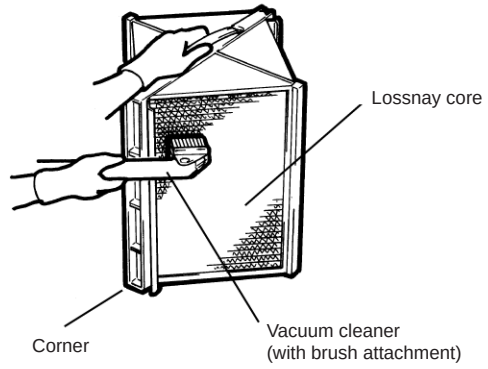

CHAPTER 10
Ventilation Standards in Each Country

1. Ventilation Standards in Each Country

1.1 Japan

Table Summary of Laws Related to Ventilation

<table>
<tr><th>Item / Related Laws</th><th>Acceptable Range</th><th>Room Environment Standard Values</th><th>Remarks</th></tr>
<tr><td>Law for Maintenance of Sanitation in Buildings</td><td>Buildings of at least 3,000 m^2 (for schools, at least 8,000 m^2)</td><td>If a central air quality management system or mechanical ventilation equipment is installed, comply with the standard target values shown in the table below.
<table>
<tr><td>Impurity volume of floating particles</td><td>less than 0.15 mg per 1 m^3 of air</td></tr>
<tr><td>CO rate</td><td>Less than 10 ppm. (Less than 20 ppm when outside supply air has a CO rate of more than 10 ppm.)</td></tr>
<tr><td>CO_2 rate</td><td>Less than 1,000 ppm.</td></tr>
<tr><td>Temperature</td><td>1) Between 17°C and 28°C
2) When making the room temperature cooler than the outside temperature, do not make the difference too great.</td></tr>
<tr><td>Relative humidity</td><td>40% - 70%</td></tr>
<tr><td>Ventilation</td><td>less than 0.5 m/sec</td></tr>
</table></td><td>Applicable buildings are buildings designed to serve a specific purpose.</td></tr>
<tr><td>The Building Standard Law of Japan</td><td>Buildings with requirements for ventilation equipment
1) windowless rooms.
2) rooms in theaters, movie theaters, assembly halls, etc.
3) kitchens, bathrooms, etc.
Rooms with equipment or devices using fire.</td><td>Central air quality management system ventilation capacity and characteristics
Effective ventilation capacity $V \geqq 20Af/N(m^3)$
Af: floor space (m^2), N: floor space occupied by one person
Characteristics: Generally satisfy the table below.
<table>
<tr><td>Impurity volume of floating particles</td><td>less than 0.15 mg per 1 m^3 of air</td></tr>
<tr><td>CO rate</td><td>Less than 10 ppm.</td></tr>
<tr><td>CO_2 rate</td><td>Less than 1,000 ppm.</td></tr>
<tr><td>Temperature</td><td>1) Between 17°C and 28°C
2) When making the room temperature cooler than the outside temperature, do not make the difference too great.</td></tr>
<tr><td>Relative humidity</td><td>40% - 70%</td></tr>
<tr><td>Ventilation</td><td>less than 0.5 m/sec</td></tr>
</table></td><td>Applicable buildings are buildings with requirements for ventilation equipment.</td></tr>
<tr><td>Industrial Safety and Health Act</td><td>Offices where workers work.
(Office sanitation regulated standards)</td><td>For general ventilation, the effective ventilation area opening is at least 1/20 of the floor space and the ventilation equipment installed gives a CO density of 50 ppm and CO_2 density of 5,000 ppm or less. If a central air quality management system or mechanical ventilation equipment is installed, comply with the standard target values shown in the table below.
<table>
<tr><td>Impurity volume of floating particles</td><td>Air (1 atmospheric pressure, 25°C) less than 0.15 mg per 1 m^3 of air</td></tr>
<tr><td>CO rate</td><td>Less than 10 ppm. (Less than 20 ppm when outside supply air has a CO rate of more than 10 ppm.)</td></tr>
<tr><td>CO_2 rate</td><td>Less than 1,000 ppm.</td></tr>
<tr><td>Air flow in room</td><td>Air speed in room is less than 0.5 m/s, and air taken into the room does not blow directly on or reach specific workers.</td></tr>
<tr><td>Heat and humidity conditions</td><td>Heat between 17°C - 28°C
Relative humidity 40% - 70%</td></tr>
</table></td><td></td></tr>
</table>

2. United States of America

ASHRAE standard 62 - 1999

Application	Outdoor air recommendation	Occupancy
Dry Cleaner	30 cfm/person	30 people/100 m^2
Dining room	20 cfm/person	70 people/100 m^2
Bars	30 cfm/person	100 people/100 m^2
Kitchens	15 cfm/person	20 people/100 m^2
Hotel bedroom	30 cfm/room	—
Hotel living room	30 cfm/room	—
Hotel lobby	15 cfm/person	30 people/100 m^2
Casino	30 cfm/person	120 people/100 m^2
Office space	20 cfm/person	7 people/100 m^2
Conference room	20 cfm/person	50 people/100 m^2
Smoking lounge	60 cfm/person	70 people/100 m^2
Bowling alley (seating area)	25 cfm/person	70 people/100 m^2

3. United Kingdam

CIBSE

Application	Outdoor air			Smoking
	Recommended	Minimum		
	Per person	Per person	Per m^2	
Factories	8 l/s /person	5 l/s /person	0.8 l/s / m^2	None
Offices (open plan)	8 l/s /person	5 l/s /person	1.3 l/s / m^2	Some
Shops, department stores and supermarkets	8 l/s /person	5 l/s /person	3.0 l/s / m^2	Some
Theatres	8 l/s /person	5 l/s /person	—	Some
Dance halls	12 l/s /person	8 l/s /person	—	Some
Hotel bedrooms	12 l/s /person	8 l/s /person	1.7 l/s / m^2	Heavy
Laboratories	12 l/s /person	8 l/s /person	—	Some
Offices (private)	12 l/s /person	8 l/s /person	1.3 l/s / m^2	Heavy
Residences (average)	12 l/s /person	8 l/s /person	—	Heavy
Restaurant (cafeteria)	12 l/s /person	8 l/s /person	—	Heavy
Cocktail bars	18 l/s /person	12 l/s /person	—	Heavy
Conference rooms (average)	18 l/s /person	12 l/s /person	—	Some
Residence	18 l/s /person	12 l/s /person	—	Heavy
Restaurant	18 l/s /person	12 l/s /person	—	Heavy
Board rooms executive offices and conference rooms	25 l/s /person	18 l/s /person	6.0 l/s / m^2	Very Heavy
Corridors	N/A	N/A	1.3 l/s / m^2	N/A
Kitchens (domestic)	N/A	N/A	10.0 l/s / m^2	N/A
Kitchens (restaurant)	N/A	N/A	20.0 l/s / m^2	N/A
Toilets	N/A	N/A	10.0 l/s / m^2	N/A

CHAPTER 11
Lossnay Q and A

	Question	Answer	Remarks
1	Paper is used for the material, but is the life adequate?	There is no problem with the life of the paper unless it is intentionally damaged, directly placed in water or in direct sunlight (ultra-violet rays). The life is longer than metal as it does not rust. It can be used for a minimum of ten years.	Depending on how it is stored, paper can be stored for up to 2,000 years without deteriorating, such as documents in temples and churches.
2	Is paper not an insulation material? (Poor conductor of heat)	Paper is very thin, and thus the conductivity of the material is low, with heat being transferred approximately the same as with metal. Test this by placing a piece of paper between your hands and you will feel the warmth of your palms. The recovery of humidity can also be felt by blowing on the paper and feeling the moisture in your breath transfer to your palm.	
3	If paper can recover humidity, will it not become wet?	Maybe you have seen the phenomenon during heating in winter where the window pane is wet but the paper blinds are dry. This is because the humidity is transferred through the paper membrane. The Lossnay is kept dry by employing this same principle.	
4	When is the forced simultaneous air intake/ exhaust-type more efficient?	When a building is sealed and normal ventilation is used, accurate exhaust is not possible unless a suction inlet is created. The Lossnay has both an air-supply fan and air-exhaust fan so Class 1 ventilation is possible.	
5	What are the energy conservation properties of the Lossnay?	For an example, in an approx. 13 m^2 room with five people, a ventilation volume of 100 m^3/h is required. The amount of power consumed in this case is approximately 45 W, and the amount of heat recovered during cooling is approximately 700 W or more. The coefficient of performance (C.O.P.) obtained when converted with the unit power generation amount is 16. In consideration that the popular heat pump-type has a C.O.P. of 2 to 3, the Lossnay is a high energy conserving machine. If a general-purpose ventilator is installed, the cooled air will be lost, thus increasing electrical costs throughout the year.	

<table>
<tr><th></th><th>Question</th><th>Answer</th><th>Remarks</th></tr>
<tr><td>6</td><td>What are the economical factors? (This is for Japan)</td><td>
Between 55 to 60% of the heat energy that escapes with ventilation is recovered by the Lossnay, so the cooling/heating cost can be reduced by approximately 43,000 yen per year. The initial costs can be suppressed down to a 59,000 yen increase when comparing the air conditioner, Lossnay, and ventilator (fixed- price base).

Calculation conditions
Cooling:
Room temperature/humidity 26°C, 50%
Outdoor air temperature/humidity 32°C, 70%
Heating:
Room temperature/humidity 20°C, 50%
Outdoor air temperature/humidity 0°C, 50%
Building:
General office facing south on middle floor 100 m^2
Cooling load (room) 104 W/m^2
Heating load (room) 77.7 W/m^2
Ventilation volume: 500 m^3/h
Without Lossnay:Straight lock fan BFS-50SU . . . . . 2 units
With Lossnay:Lossnay LGH-50RX4 . . . . . 1 unit
Cooling/heating load (W):
<table>
<tr><th></th><th colspan="3">Without Lossnay</th><th colspan="3">With Lossnay</th></tr>
<tr><th></th><th>Room</th><th>Outdoors</th><th>Total</th><th>Room</th><th>Outdoors</th><th>Total</th></tr>
<tr><td>Cooling</td><td>10400</td><td>5560</td><td>15960</td><td>10400</td><td>2340</td><td>12740</td></tr>
<tr><td>Heating</td><td>7770</td><td>5630</td><td>13400</td><td>7770</td><td>2140</td><td>9910</td></tr>
</table>
Air conditioner:
Without Lossnay : Ceiling-suspended cassette-type air conditioner PLZ-J140KA9G9 . . . . . 1 unit
With Lossnay : PLZ-J112KA9G9 . . . . . 1 unit
Operation time:
Cooling 10 hours/day, 26 days/month, 4 months/year, operation ratio 0.7
Heating 10 hours/day, 26 days/month, 5 months/year, operation ratio 0.7
Power costs (Tokyo Power special industrial power 6 kV supply)
Summer 16.15 yen /kWh, Other 14.65/kWh
</td><td>There are also "savings in maintenance cost", "ventilation functions", "soundproofing effects" as well as "comfort" and "safety" which are not visible.</td></tr>
<tr><td>7</td><td>If the air ventilated from the toilet is heat recovered, will the odors be transferred to other rooms?</td><td>
For an example if the total ventilation volume is 100, and the amount of odors generated from the toilet, etc., is 30, the total volume of conditioned air is still three times the ventilation amount. Thus, if the leakage rate of odors is 7% (hydrogen sulphide), this will be: 100 × 30% × 1/3 × 7% = 0.7%. Thus, no problem is seen in terms of total air conditioned air volume. However, exhaust is usually performed with a separate system. In the case of ammonia, the rate is 2.8% using the same formula.
Note: (The rotary-type has approximately the same transmission rate, but for ammonia, the transmission rate is 50% or more than the Lossnay heat recovery method.)
</td><td>
<Gas/smoke transmission rate>
CO : 1%
CO_2 : 2%
H_2S : 3%
NH_3 : 3%
Smoke : 1% - 2%
<Conditions>
(Supply and exhaust fans installed for suction feed. Standard treatment air volume.)
</td></tr>
</table>

	Question	Answer	Remarks
8	Can the Lossnay be used for hospital air conditioning?	According to the results obtained from the test performed by the Tokyo University Hospital (Inspection Centre, Prof. Kihachiro Shimizu), as the supply air and exhaust air pass through different passages, transmission of bacteria from exhaust side to supply side is low. They found: 1) Bacteria does not propagate in the Lossnay Core. 2) Even if bacteria accumulated in the Lossnay, it died off in approximately two weeks.	
9	Since the entry to the Lossnay Core is fine and the incident air turbulent, won't it clog easily?	Normally, the original state of the filter can be regained by cleaning it more than once every one year, and the two intake side surfaces of the Lossnay Core more than once two years with a vacuum cleaner. Dust will not adhere in the passage due to the laminar flow if the air is normal. 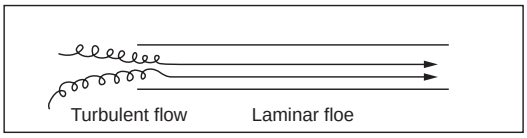 	Normal air refers to air that does not contain oil mist, etc. When exhausting air containing oil mist, etc., install a filter at return grille to remove the oil mist.
10	What is the air leakage rate?	This will differ on the position of the fans, but for both suction or both forced, the rate is 2% to 3%. LGH type fan position is both forced. 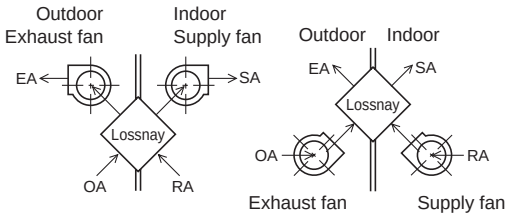 For using LU type, if the static pressure difference between SA and RA and between EA and OA is 500 Pa, the air leakage rate will be 2.5%, and 3.4%. This value is considered to be of no problem for actual use. However, the single suction or single forced methods will have a leakage rate of 10% or higher and should be avoided.	
11	Can the Lossnay be used in extreme cold climates (-10°C or lower)?	If the winter room air temperature is above 20°C along with the humidity above 50%, and the outdoor temperature is -10°C or lower, moisture condensation or frosting will occur on the Lossnay Core. In this case, the intake air must be preheated. Plot the Lossnay intake side air conditions A and B on a psychrometric chart as shown below. If the high temperature side air B intersects the saturation curve such as at C, moisture condensation or frosting will occur on the Lossnay. In this case, the air should be preheated to the temperature indicated by point A' so that point C reaches the C' point. 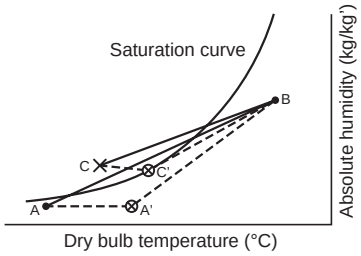 	

<table>
<tr><th></th><th>Question</th><th>Answer</th><th>Remarks</th></tr>
<tr><td>12</td><td>Will tobacco nicotine and tar affect the Lossnay Core?</td><td>Tobacco smoke tends to stick to dust in the air, and when it passes through the Lossnay Core, most of the nicotine and tar will be filtered by the air filter.
However, in very smoky places (ex. pachinko parlour), or when used for a long period, the tobacco odor will accumulate and move to the intake side. In this case, the Core and filter should be replaced.</td><td>Ample filtering will not be possible with a saran net air filter.</td></tr>
<tr><td>13</td><td>What is the guideline for ventilation.
(These guidelines are for Japan.)</td><td>According to the The Building Standard Law of Japan, a ventilation volume of 20 m^3/h.
Person is required if the windows cannot be opened for ventilation.
In buildings to which the Law for Maintenance of Sanitation in Buildings is applied, the carbon gas concentration must be 0.1% or less, so a ventilation of 34 m^3/h·Person is required. In Tokyo, the guideline is set at 25 to 30 m^3/h.
The required ventilation volume per person is noted below.
<table>
<tr><th rowspan="2">Degree of smoking</th><th rowspan="2">Application example</th><th colspan="2">Required ventilation volume (m^3/h)</th></tr>
<tr><th>Recommended value</th><th>Minimum value</th></tr>
<tr><td>Extremely heavy</td><td>Broker's office
Newspaper editing room
Conference room</td><td>85</td><td>51</td></tr>
<tr><td>Quite Heavy</td><td>Bar
Cabaret</td><td>51</td><td>42.5</td></tr>
<tr><td>Heavy</td><td>Office
Restaurant</td><td>25.5
25.5</td><td>17
20</td></tr>
<tr><td>Light</td><td>Shop
Department store</td><td>25.5</td><td>17</td></tr>
<tr><td>None</td><td>Teatre
Hospital room</td><td>25.5
34</td><td>17
25.5</td></tr>
</table></td><td></td></tr>
<tr><td>14</td><td>Are there any places where the Lossnay cannot be used?</td><td>The Lossnay cannot be used where toxic gases and corrosive Core's such as acids, alkalis, organic solvents, oil mist or paints exist.
The Lossnay cannot be used to recover the heat of air containing odors.</td><td></td></tr>
<tr><td>15</td><td>What are the soundproofing properties for music rooms and karaoke bars?</td><td>When an LGH-50R$_5^+$ was installed in a karaoke bar and the noise was measured, the following results were obtained. When the noise in the room was 96.5 dB (A), the noise level at a point 30 cm from the intake/exhaust grille on the outside wall was 67.5 dB (A). This shows a soundproofing effect of 29.0 dB (A).
The soundproofing effect when the noise level is 100 dB (A) is approximately 30 dB (A).</td><td>+:
Japanese domestic market model.
Same model as LGH-50RX$_4$.</td></tr>
</table>

<table>
<tr><th></th><th>Question</th><th>Answer</th><th>Remarks</th></tr>
<tr><td>16</td><td>What is the short circulation of the air intake/exhaust air outlet?</td><td>
The Lossnay uses the forced simultaneous supply/exhaust method so the insufficient ventilation found in standard ventilators with no air intake is not found.

⚠ Caution
(1) The fresh air supplied to the room should not short circulate being drawn back into the return grille. It should flow through the entire room.
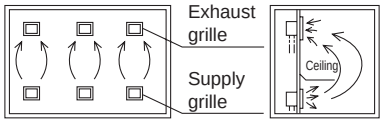

(2) The relation of the supply and suction flows of the air conditioner must be also considered.
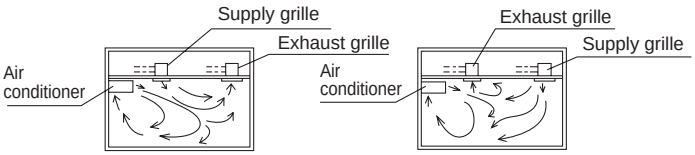

■ The air intake/exhaust grille on the outer wall is in the open and so there is a natural wind, with the result that short circulation will not occur easily. However, if the wind blows from the exhaust grille towards the intake grille, short circulation may occur, so these should be placed as far apart as possible.
The guideline for the distance is three times the duct diameter.
<table>
<tr><th>Duct diameter</th><th>L (mm)</th></tr>
<tr><td>ø100</td><td>300</td></tr>
<tr><td>ø150</td><td>450</td></tr>
<tr><td>ø200</td><td>600</td></tr>
<tr><td>ø250</td><td>750</td></tr>
</table>
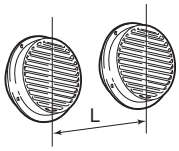

</td><td></td></tr>
<tr><td>17</td><td>Is total operation possible with switches?</td><td>Several units can be operated with the optional control switch.</td><td></td></tr>
<tr><td>18</td><td>What is the difference between the rotary-type and static-type?</td><td>Refer to “Chapter 3 Performance comparisons with various heat recovery units and ventilators”.</td><td></td></tr>
<tr><td>19</td><td>Is an inspection hole necessary?</td><td>For the ceiling embedded-type, the unit is installed in the false ceiling, so an inspection hole is required at the Core and filter removal section and fan maintenance section.
Refer to the catalog for details.</td><td></td></tr>
<tr><td>20</td><td>What must be performed during maintenance?</td><td>Periodic inspection and cleaning of the Lossnay Core and air filter is necessary. Refer to “Chapter 9 Maintenance” for details.</td><td></td></tr>
</table>

<table>
<tr><th></th><th>Question</th><th>Answer</th><th>Remarks</th></tr>
<tr><td>21</td><td>What are Class 1 ventilating facilities?</td><td>Class 1 ventilation refers to mechanical ventilation (forced simultaneous air supply/exhaust) using both intake and exhaust fans for suction feed. All Lossnay models (with built-in air-feed fans) are Class 1 ventilators. The ventilation method is classified in relation to the degree of natural and/or mechanical ventilation employed.
<Classification of ventilation>
<table>
<tr><th></th><th>Intake</th><th>Exhaust</th><th>Ventilation volume</th><th>Room pressure</th></tr>
<tr><td>Class 1</td><td>Mechanical</td><td>Mechanical</td><td>Random (constant)</td><td>Random</td></tr>
<tr><td>Class 2</td><td>Mechanical</td><td>Natural</td><td>Random (constant)</td><td>Positive pressure</td></tr>
<tr><td>Class 3</td><td>Natural</td><td>Mechanical</td><td>Random (constant)</td><td>Negative pressure</td></tr>
<tr><td>Class 4</td><td>Natural</td><td>Assisted natural</td><td>Limited (inconstant)</td><td>Negative pressure</td></tr>
</table></td><td></td></tr>
<tr><td>22</td><td>Can the high efficiency filter (PZ-FM)* be installed on the supply air side?</td><td>Please install the high efficiency filter only on the outside air side.
(Reason)
● If installed on the supply air side, primary dirty air will enter the Lossnay before passing through the prefilter, accelerating the Core's clogging.
● Moisture prevention measures may also be required.</td><td></td></tr>
<tr><td>23</td><td>What are the anti-vibration measures for the Lossnay?</td><td>Measures are not required as a principle.</td><td></td></tr>
<tr><td>24</td><td>Can the LGH and R types be installed vertically?</td><td>Vertical installation is possible in some cases. Refer to Chapter 5 Section 11 for details.</td><td></td></tr>
</table>

* Please consult with nearest Lossnay supplier about availability of these parts.

Lossnay
Remote Controller

CONTENTS

1. Summary . . . 1
2. Applicable Models . . . 1
3. Terminology . . . 2
4. System Features and Examples . . . 3
   4.1 Features . . . 3
   4.2 System Example . . . 4
   4.3 System Selection . . . 6
   4.4 Basic System . . . 9
   4.5 Interlocking with Mr. Slim . . . 12
   4.6 M-NET Control . . . 14
5. Examples of Applications Using External Control Input Terminals, Operation Monitor Output Terminals and Malfunction Monitor Output Terminals . . . 21
   5.1 External Control Operationg Mode Selection . . . 22
   5.2 Delayed Interlocked Operation (PZ-41SLB-E, M-NET) . . . 23
   5.3 Multiple External device Operation (PZ-41SLB-E, M-NET) . . . 23
   5.4 Multiple Lossnay Units in Interlocked Operation with One Indoor Unit. (M-NET only) . . . 24
   5.5 Interlocked Operation of Equipment such as the Electrically Operated Damper and Booster Fan.(M-NET only) . . . 25
   5.6 To Pick Up an Error Signal Externally (PZ-41SLB-E, M-NET) . . . 25
   5.7 Connection Method (PZ-41SLB-E, M-NET) . . . 25
   5.8 High/Low Change Input (PZ-41SLB-E, M-NET) . . . 27
6. Precautions When Designing Systems of M-NET . . . 29
   6.1 Power Supply of the M-NET Transmission Cable . . . 29
   6.2 Restrictions When the Lossnay Units are Connected to the Central Controller M-NET Transmission Cable . . . 29
   6.3 Wiring Example . . . 30
   6.4 Power Supply to the Indoor Unit Transmission Cable . . . 31
7. Cable Installation of the M-NET . . . 32
   7.1 Precautions When Installing Wiring . . . 32
8. System Designs of M-NET . . . 35
   8.1 Address Definitions . . . 35
   8.2 Precautions When Performing Group Settings (when not interlocked with City Multi indoor unit) . . . 37
   8.3 Precautions When Performing Interlock Settings (when interlocked with City Multi indoor unit) . . . 37
9. Automatic Ventilation Switching . . . 38
   9.1 Effect of Automatic Ventilation Mode . . . 38
   9.2 Switching between Heat Recovery and By-pass in the Automatic Ventilation Mode . . . 38
10. Caution of Lossnay Operation in cold region . . . 40
   10.1 Use of Pre-Heating Unit . . . 40
   10.2 Wiring Preheater with Lossnay . . . 40
   10.3 Algorithm of Preheater Control by Lossnay PCB . . . 41
   10.4 Example of Heater Capacity . . . 42
   10.5 Caution for Selecting Pre-heating Unit . . . 43

11. Troubleshooting 44
11.1 Service Flow 44
11.2 Items to Check 46
11.3 Circuit Test Point 60
12. Installation method (Model LGH-RX4-E series) 61
12.1 Electrical installation 61
12.2 Connecting the power supply cable 63
12.3 Function settings 69
12.4 Trial operation 72
13. Lossnay Remote Controller (PZ-41SLB-E) 74
13.1 Operation 74
13.2 Mode of Use 75
13.3 Care and Upkeep 76
13.4 After-Sales Service 76
13.5 Component Names and External Dimensions 77
13.6 Installation Dimensions 77
13.7 Trial Operation 79
14. Lossnay M-NET Remote Controller (PZ-52SF-E) 80
14.1 Operation 80
14.2 Installing the Lossnay M-NET Remote Controller 81
14.3 Registering the Lossnay Unit with the Lossnay M-NET Remote Controller 82
15. Appendix 84
15.1 System Controller (G-50A) 84
15.2 Remote Controllers for Mr. Slim indoor unit 91
15.3 Network Remote Controller (PAR-F27MEA) 94
* System Controller (G-50A)
(Operation setting, Initial setting, Group configuration setting, Interlocked operation setting) 80
* Remote Controllers for Mr. Slim indoor unit 87
* Network Remote Controller (PAR-F27MEA) (Interlocked registration) 90

1. Summary

This is a technical manual relating to the controls for implementing the following systems of the commercial-type Lossnay (LGH-RX4-E Series).

Possible System Configurations

(1) When using only the Lossnay remote controller.
(2) Linking Lossnay and City Multi units.
(3) Linking Mr. Slim (A-control, K-control).
(4) Lossnay central control systems.
(5) Linking with external equipment (BMS).

2. Applicable Models

● Lossnay (LGH-RX4-E)

These models have temperature sensors at RA and OA sides. It can automatically switch to the ventilation mode. (Lossnay/By-pass)

Model	Model
LGH-15RX4-E	LGH-65RX4-E
LGH-25RX4-E	LGH-80RX4-E
LGH-35RX4-E	LGH-100RX4-E
LGH-50RX4-E	LGH-150RX4-E
	LGH-200RX4-E

The main differences between RX4 models and former RX3 models.

No.	RX4 models	RX3 models
1	The LGH-65RX4-E is new size model.	No model of the same specification.
2	All models carry one control board.	The models of 150 and 200 carry two control boards.
3	Preheater control function. SW5-6 (Refer to page 40)	No such function.
4	The connection terminal of the PZ-41SLB-E is TM4. (Refer to page 5)	The connection terminal of the PZ-41SLB-E is TM2 ⑤, ⑥.
5	Multi ventilation mode SW2-4, 5. The following selection. 1. High/Low selective by controllers. 2. Fixed EA fan to Low. 3. Fixed SA fan to Low. 4. Fixed EA/SA fans to Low. (Refer to page 70)	Ventilation mode SW2-4, 5. The following selection. 1. High/Low selective by controllers. 2. Fixed EA/SA fans to Low. 3. Fixed EA/SA fans to Hight.
6	Power exhaust function SW2-3. Runs the fan forcibly for 30 minutes when operation starts. (Refer to page 69)	Compulsory By-pass operation SW2-3.
7	Time setup for filter cleaning SW5-5. Either 3000 hours or unlimited.(Refer to page 71)	Time setup for filter cleaning SW5-5, 6. The following selection 3000, 1500, 4500, unlimited hours.

● Lossnay Remote Controller (PZ-41SLB-E)

Use when operating from 1 to 15 Lossnay units together at the same time. When using M-NET transmission to operate from System controller, use the PZ-52SF-E.
It can start and stop the unit, change fan speed, switch the ventilation mode. It also includes indicators that show errors and when filter maintenance is required. Refer to page 74.

● Lossnay M-NET Remote Controller (PZ-52SF-E)

It can be used in combination with Mitsubishi Electric Air conditioner Network system (MELANS). Refer to page 80. Since this remote controller is supplied the power from the M-NET transmission line, it cannot be linked with Mr. Slim and other such systems that do not use M-NET.

Please refer to the technical documentation for the other systems: City Multi, Mr. Slim and the central controller (MELANS).

3. Terminology

● Interlocked Lossnay

This is a Lossnay linked to City Multi, or Mr. Slim indoor units. This is a Lossnay that has been set to interlocked group setting to receive signals and operate via indoor unit's remote controller → indoor unit → Lossnay.

● Non-interlocked Lossnay

This is a Lossnay that is not set to interlocked group setting with City Multi nor Mr. Slim indoor units. It operates using direct operating signals from the Lossnay remote controller and/or system controllers.

● Ventilation Mode

This mode controls the Lossnay damper and permits selection of heat recovery (Heat ex.), by-pass or auto modes.

● Delayed Operation

The Lossnay that has been set to interlocked group setting with the indoor unit will have its operation delayed for 30 minutes after the operation of the indoor unit. When using PZ-41SLB-E, the time setting that can be set for delayed operation are 10, 20, 30, 40, 50, and 60 minutes.

● External Control Input

This is an input signal for operating the Lossnay that has been sent from an external device. It is compatible with 12V-24V DC or uncharged a-contact signal.

● Operation Mode

This mode is used for selecting enabling/disabling of the on/off control signal from an external device and for setting interlocked operation of the external device and the Lossnay.
Please Refer to page 22 for details.

ON/OFF interlock:	Enables both "ON → OFF" and "OFF → ON" external signals.
ON interlock:	Enables "OFF → ON" external signal. Disables "ON → OFF" external signal.
OFF interlock:	Enables "ON → OFF" external signal. Disables "OFF → ON" external signal.
External priority:	Same as on/off interlock but the OFF signal from the remote controller is ignored when the external control signal is on.

● Setting Pulse Input

When the control signal from the external device outputs a pulse such as the one shown below, pulse input setting is performed by the Lossnay. (Optional setting DIP switch 2-2 ON)

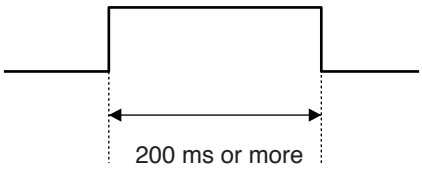

● RA (Return Air)

This is the abbreviation for return air, which is the air drawn in from indoor.

● OA (Outdoor Air)

This is the abbreviation for outdoor air, which is the air drawn in from outdoor.

● System controller

The MELANS series controller.
Registration and management of two or more groups can be carried out. The following models are applicable.
PAC-SC30GRA, PAC-SF44SRA, PAC-YT34STA, PAC-YT40ANRA, G-50A

4. System Features and Examples

4.1 Features

Classification	Item	Notes/Cautions
Control	• Multiple unit operation	Maximum 15 units with PZ-41SLB-E; 16 units with PZ-52SF-E or other M-NET controller.
	• Remote controller operation	Last touch priority
	• External device operation	Signal form: 12VDC, 24VDC, uncharged a-contact
	• External pulse control	Ditto
	• External monitor signal output	Uncharged a-contact (external monitor/supply air fan monitor change)
	• Supply air fan monitor output	Ditto
	• External control operation mode setting	ON/OFF , ON, OFF and External priority ON/OFF mode.
	• Delayed start	Delayed time can be varied only when the PZ-41SLB-E is connected.
	• Automatic recovery following power supply interruption (*1)	Return power automatic return is fixed when the PZ-41SLB-E is connected.
	• Power supply start/stop function	Impossible when the PZ-41SLB-E is connected.
	• High/low change input	Uncharged a-contact (Part sold separately is necessary)
	• Remote/Local control change	Uncharged a-contact (Part sold separately is necessary) (Connection is impossible when using PZ-41SLB-E)
	• The M-NET air conditioning operation.	Only when M-NET transmission cable is connected
	• System controller by Mitsubishi building air control management system	Ditto
	• Interlocked with Mr. Slim	Can not use the PZ-41SLB-E
	• Pre-heater control	By raising the OA temperature using a commercial heater, it is possible to use the Lossnay at the temperature below specified OA condition. The exclusive output for this preheating control is prepared.
Function	• Lossnay (heat recovery) ventilation/By-pass ventilation automatic switch • For cold area operation	
Installation	• Remote controller 2 wires wiring (non-polar)	When the PZ-41SLB-E is connected: PVC cable ø 0.65 to 1.2 or strand wire 0.3 mm^2 to 1.25 mm^2. When M-NET is connected: shielded wire or equivalent 1.25 mm^2 to 2.00 m^2.
	• Address setting unnecessary	Excluding central controller system (except automatic address)
	• Test operation switch	For Lossnay single unit test operation
Maintenance	• Filter maintenance display (remote controller display) • Inspection display (remote controller, control board LED) • M-NET power supply display (control board LED)	

*1 The operation condition is stored, and when the power is turned off and then back on, the operation condition returns to the previous condition. (When using PZ-41SLB-E, the start/stop condition from an external device is not stored.)

4.2 System Example

Basic System (Refer to page 9)

1 Lossnay with 1 remote controller

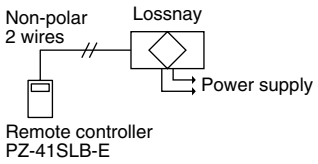

- This is a simple system.
  A Lossnay is operated independently with 1 remote controller.

Multiple Lossnay units with 1 remote controller

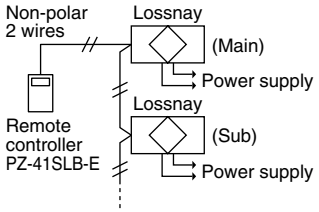

- Up to 15 Lossnay units can be controlled at one time with one remote controller.

2 remote controller system with 1 Lossnay

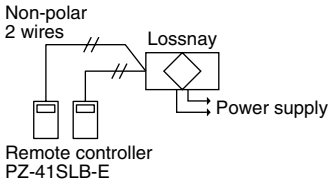

- The Lossnay can be controlled from 2 remote locations.
- The remote controller gives priority to the last touch.

Operation with an Air Conditioning Unit (Refer to page 12)

Operating with Mr. Slim (A-control or K-control)

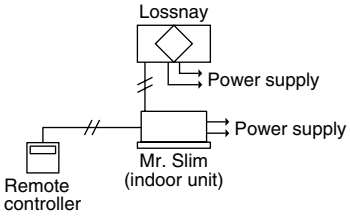

- The Remote controller (A-control or K-control) controls the air conditioning device and the Lossnay.
- When using the A-control remote controller operating or switching fan speed for the Lossnay individually is possible.

Operating with an External Device (Refer to page 21)

Operating with an external device

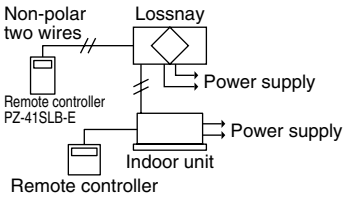

- Selection of interlocked operation mode is possible.
- Delayed start interlocked operation is possible.

- The operation of the Lossnay will be connected with the operation or stopping of the external device.
- Input of level signal or pulse signal (12V DC, 24V DC, uncharged a-contact) is possible.

M-NET System

City Multi and Lossnay Interlocked System

Air conditioning device and system control

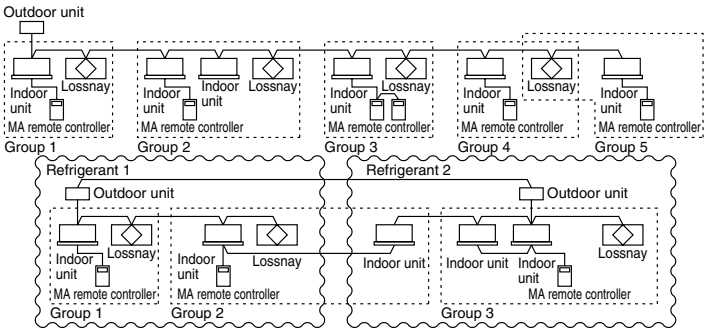

- It is possible to operate 16 indoor units per 1 Lossnay

Centralized Management System

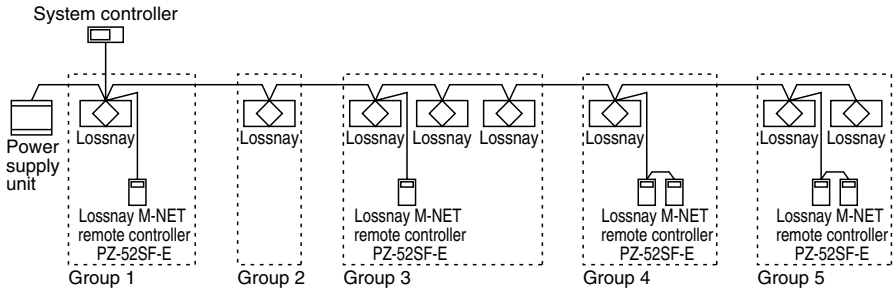

- Control of start/stop, fan speed and ventilation mode is possible from the Lossnay M-NET remote controller.
- Control of start/stop, fan speed and ventilation mode is based on each system controller.
- It is possible to set a maximum of 16 units for 1 group.

2 remote controller system with multiple Lossnay units

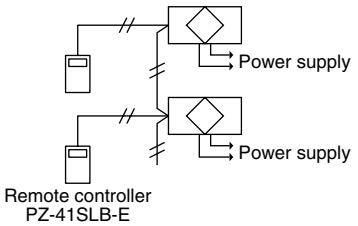

● It is also possible to operate 2 remote controller units when using multiple Lossnay units.

Use Lossnay remote controller **PZ-41SLB-E**.
(Do not use PZ-52SF-E).

Lossnay transmission connection terminal

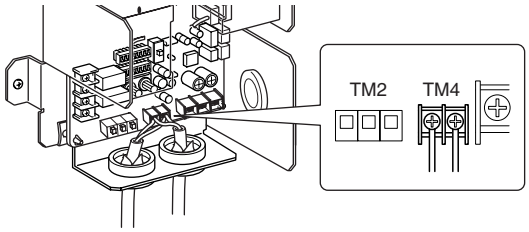

Setting

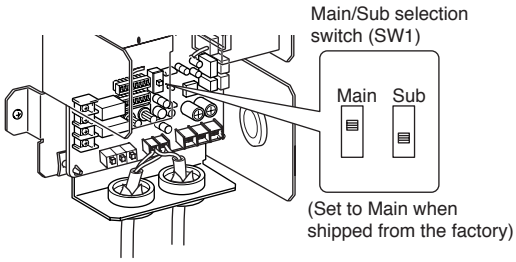

Interlocking multiple units
When the operation signal is a uncharged a-contact signal

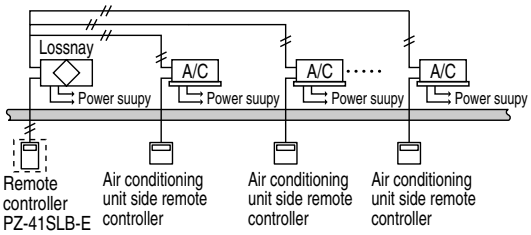

● Interlocking is possible from multiple air conditioning units, etc. (excluding pulse input)
(Separately sold parts are necessary depending on the operation signal).

Interlocking/individual joint systems

By making the group setting, interlock settings have become possible. (Joint use of the air conditioner remote controller and Lossnay remote controller is possible.)

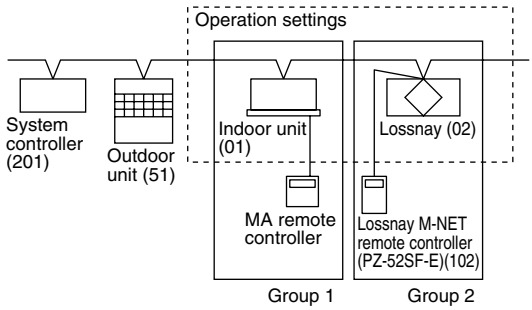

( ) address

● Applicable indoor units are C type or later (for use with MA remote controller) models
● Do not set the air conditioning unit and Lossnay unit to be part of the same group.

Use Lossnay M-NET remote controller **PZ-52SF-E**.
(Do not use PZ-41SLB-E).

Lossnay transmission connection terminal

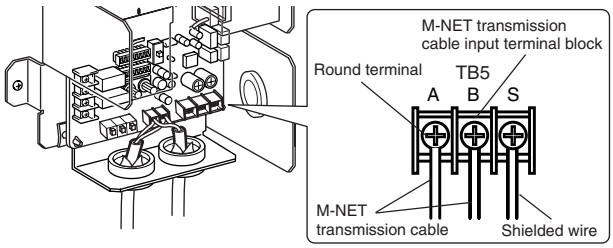

Setting

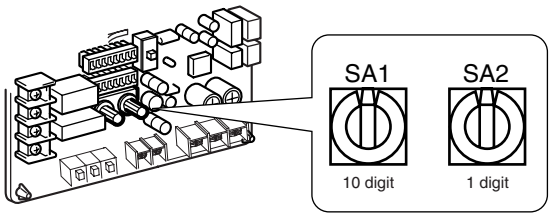

When the address number has been changed, the data in the memory is automatically reset.

4.3 System Selection

Interlocked with City Multi (Refer to page 16)

Lossnay operation when indoor unit is stopped	○
Lossnay stopping when indoor unit is operating	○
Switching Lossnay fan speed	
When interlocked with indoor unit for compatibility with both R22 and R407C	High/Low
When interlocked with indoor unit for other than the above	Fixed to high
Ventilation mode	Fixed to automatic
Filter maintenance indicator	○
Lossnay error indicator	○
Delayed operation	○
External control operating mode selection	×
Number of indoor units for interlocked group setting with one Lossnay unit	16 units
Number of Lossnay units for interlocked group setting with one indoor unit	1 unit

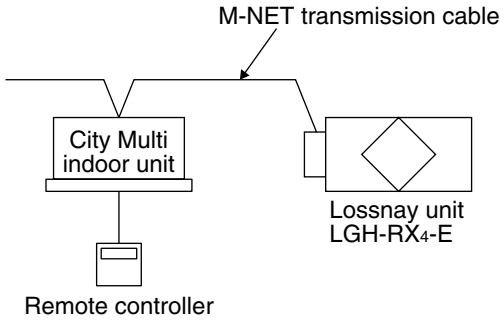

Interlocked with Mr. Slim (Refer to page 12)

When using A-control remote controller	
Lossnay operation when indoor unit is stopped	○
Lossnay stopping when indoor unit is operating	×
Lossnay fan speed switching	High/Low
When using K-control controller	
Lossnay operation when indoor unit is stopped	×
Lossnay stopping when indoor unit is operating	×
Lossnay fan speed switching	Fixed to high
Other common items	
Lossnay error indicator	×
Ventilation mode	Fixed to automatic
Filter maintenance indicator	×
Delayed operation	○
External control operating mode selection	×
Number of indoor units for interlocked group setting with one Lossnay unit	1 unit
Number of Lossnay units for interlocked group setting with one indoor unit	1 unit

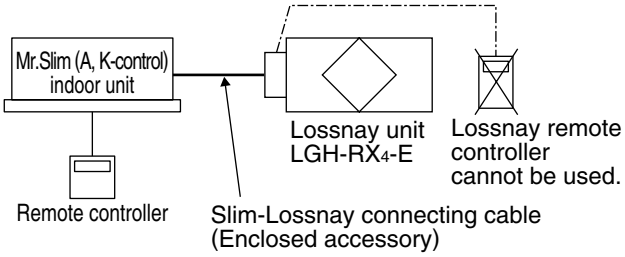

Independent Lossnay Unit (Not interlocked with City Multi or Mr. Slim systems.) (Refer to page 9)

Start/Stop	○
Fan speed switching	High/Low
Ventilation mode	Heat ex. / By-pass/ Auto
Filter maintenance indicator	○
Lossnay error indicator	○
Delayed operation	○
External control operating mode selection	○
Number of Lossnay units	15 units
Number of remote controllers	2 units

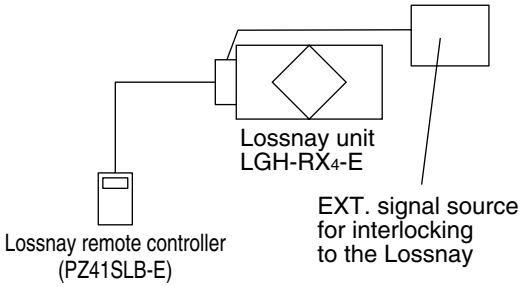

Interlocked with external device (BMS) (Refer to page 21)

Start/Stop	○
Fan speed switching	Fixed to high
Ventilation mode switching	Fixed to automatic
Filter maintenance indicator	×
Lossnay error indicator	×
Delayed operation	○
External control operating mode selection	○

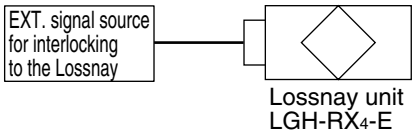

Central Controller System

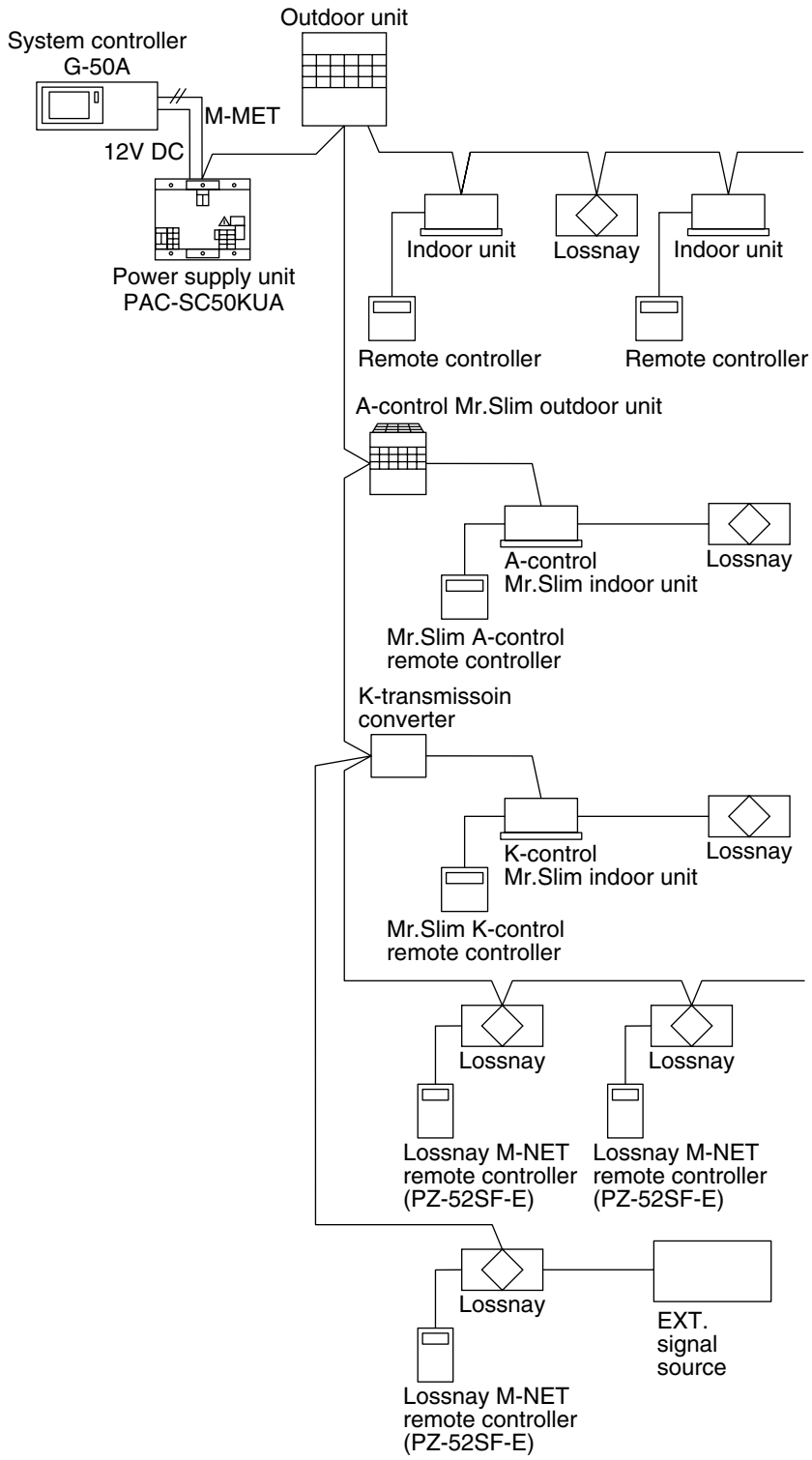

Central Controller System

Caution:

- Lossnay remote controller PZ-41SLB-E can not be used.

Reference: Remote controller for the Lossnay and indoor unit.

Refer to the technical documentation related to the Remote controller for the indoor unit.

Remote controllers for Lossnay unit

Lossnay remote controller (PZ-41SLB-E)

With Lossnay interlock switches and indicators.

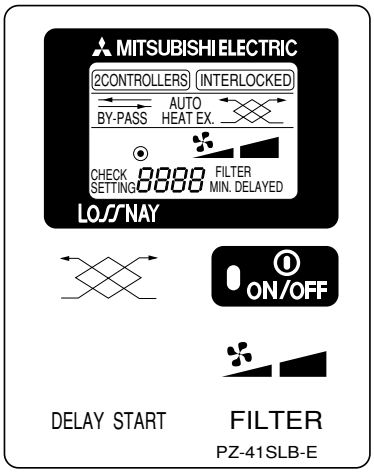

Lossnay M-NET remote controller (PZ-52SF-E)

Without Lossnay interlock switches and indicators.

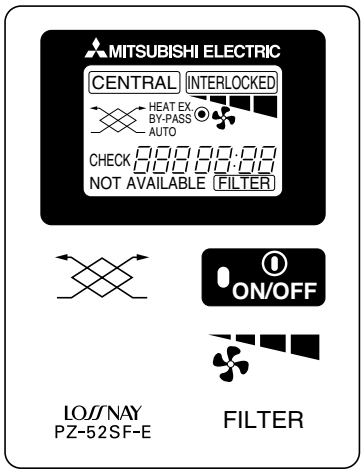

Remote controllers for City Multi indoor unit

MA remote controller (PAR-20MAA)

* non M-NET protocol

With Lossnay interlock switches and indicators.

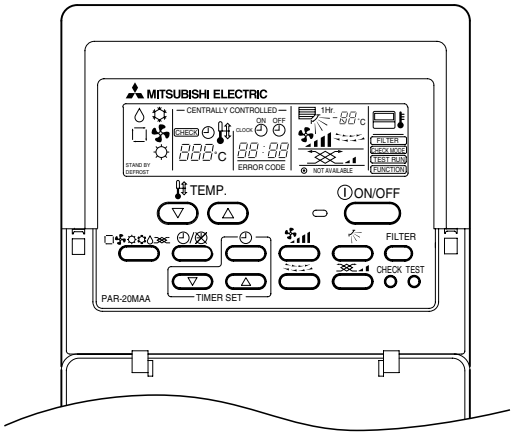

ME remote controller (PAR-F27MEA)

Without Lossnay interlock switches and indicators.

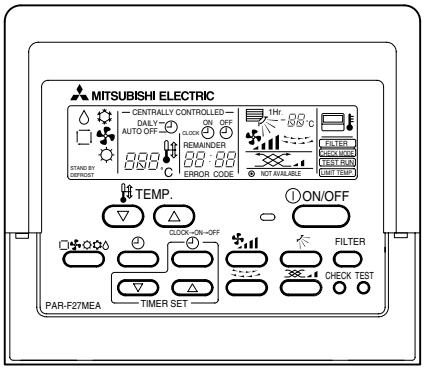

Remote controllers for Mr. Slim indoor unit

A-control remote controller (PAR-27AA)

With Lossnay interlock switches and indicators.

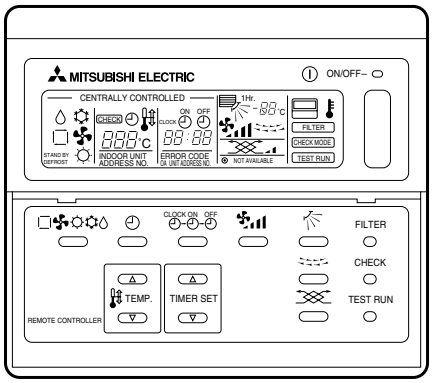

K-control remote controller

Without Lossnay interlock switches and indicators.

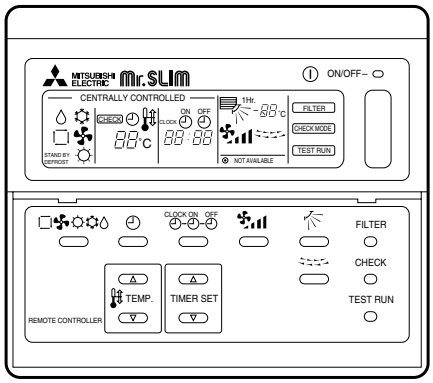

4.4 Basic System

4.4.1 System Summary

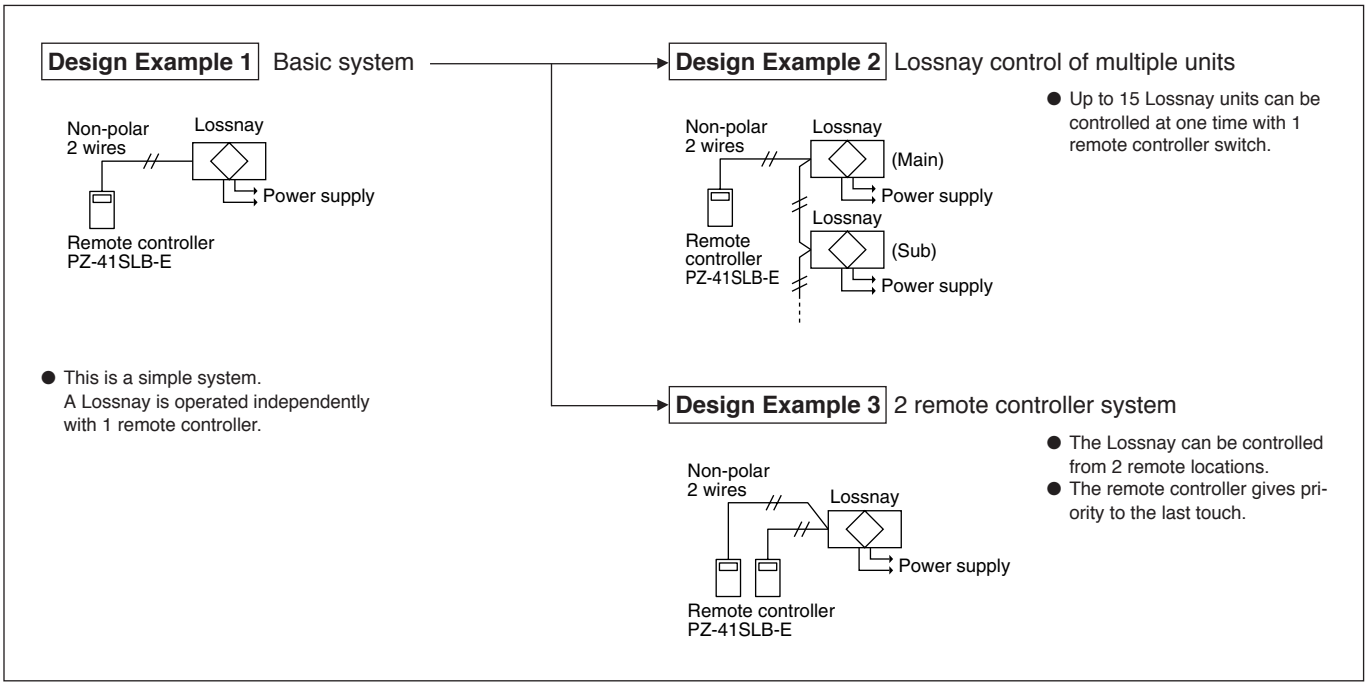

4.4.2 Operation of Multiple Units

Feature	For LGH-15 to 200RX4, 1 remote controller can operate from 1 to 15 Lossnay units.
Ordered part	Remote controller PZ-41SLB-E
Notes	• Also connect the power to the second and following Lossnay units. • The maximum extension of the transmission cable is 500 m or less (between Lossnay and remote controller switch, between Lossnay and Lossnay). • The main or Sub setting on the Lossnay is necessary.

Note:

- The external device operation signal, and pulse signals can only be connected to the Lossnay on the “Main” setting.
- When the M-NET system is connected, do not connect the transmission cable to TM4.

System Example

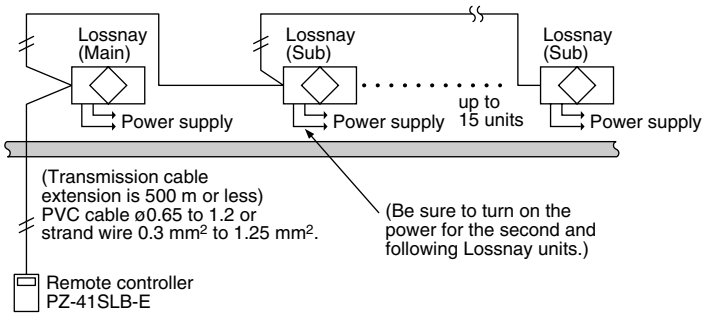

Combined Line Method

Connect the transmission cable from the first Lossnay to the second, the second to the third, and so on up to a maximum of 15 units.

(1) Up to four wires can be connected to one signal terminal when a transmission cable is ø0.65 or strand wire 0.3 mm^2 , or up to 2 wires in other cases.

(2) The signal is non-polar, so it is not necessary to align polarity.

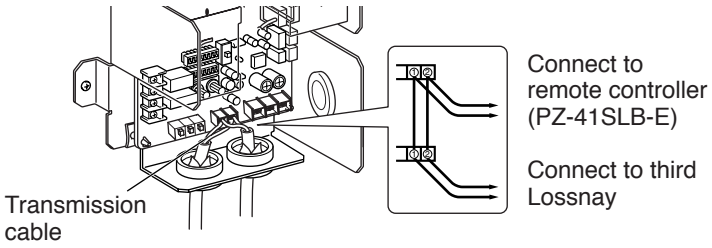

Lossnay Main/Sub Setting

Be sure to make the Main/Sub setting when operating multiple Lossnay units.
When operating multiple Lossnay units, set the first one to “Main,” set the second and following to “Sub.”
Be sure the power is off when making the settings.

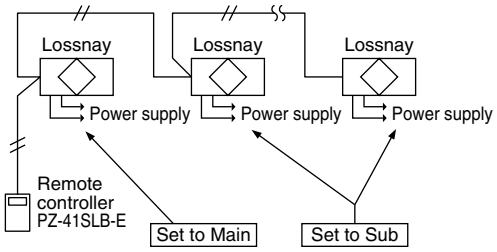

Change the Main/Sub switch (SW1) on the control board to “Sub” for the second and following Lossnay units.

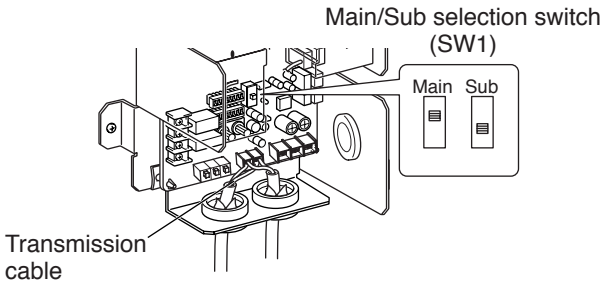

Operation Method

Up to 15 Lossnay units can be operated when running at the same time. (Individual control is not possible)

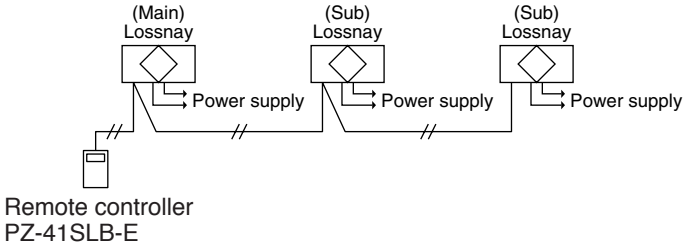

4.4.3 Operation with 2 Remote controllers

Characteristics	Remote controller	Note
• Lossnay can be operated from two remote locations. • Lossnay conditions can be checked from two remote locations. • The remote controller gives priority to the last touch.	Lossnay remote controller PZ-41SLB-E	• Use only up to 2 remote controller (Operation will not go normally if 3 remote controller switches are con nected.)

System Example

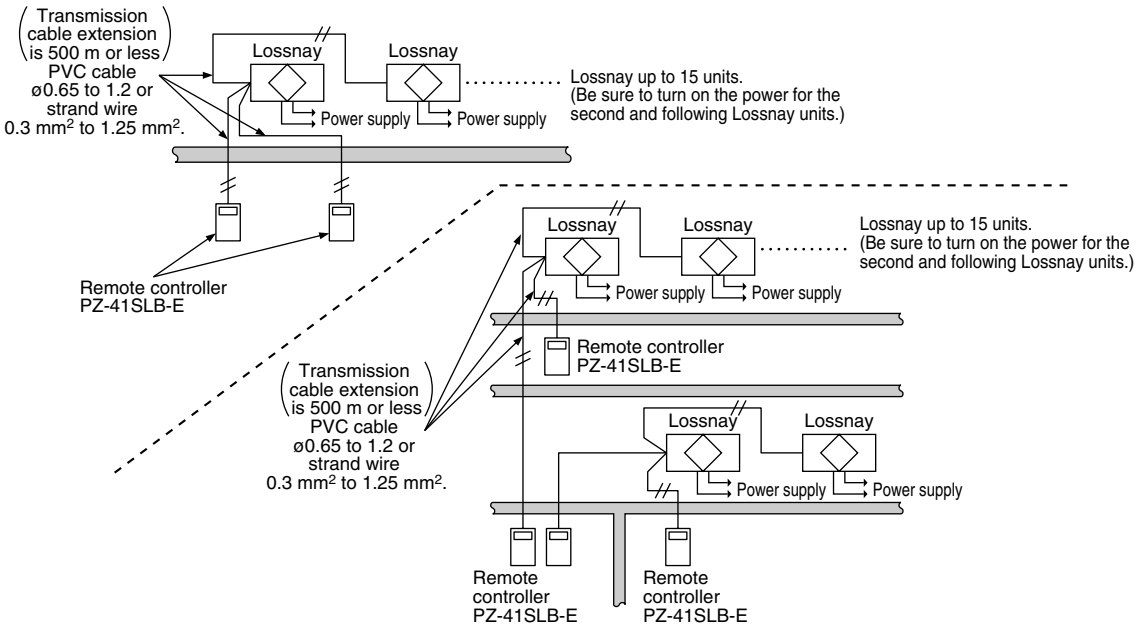

Operation Method

(1) When there are 2 remote controllers, “2 CONTROLLERS” will display on the LCD readout’s upper region.

(2) The operation is the same with each remote controller. In this case, the Lossnay gives operating priority to the last button push.

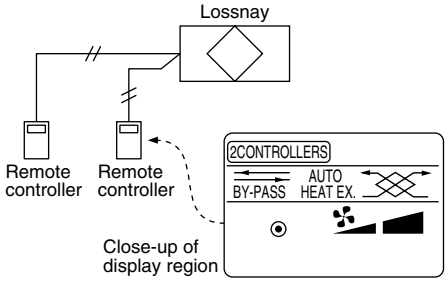

4.5 Interlocking with Mr. Slim

4.5.1 Interlocked Mr. Slim and Lossnay System

Features

- Interlocked operation with Mitsubishi air-conditioners is possible.

System Example

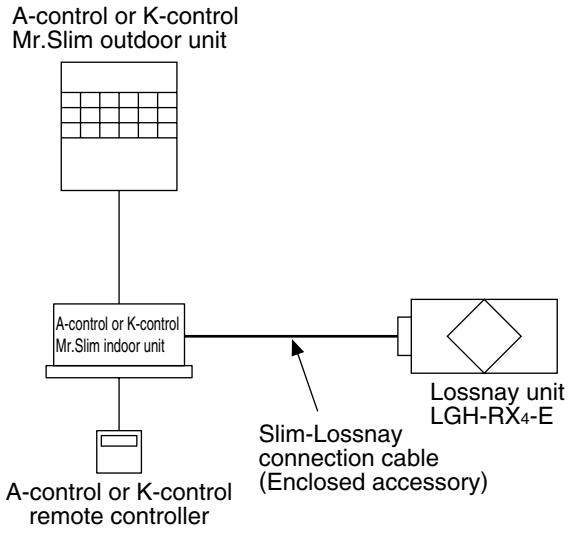

Lossnay Function Table (Interlocked settings)

Item		Details
Number of indoor units that can be set to interlocked operation with 1 Lossnay unit in each group		1 unit
Number of Lossnay units that can be set to interlocked operation with 1 indoor unit		1 unit
Operation of Lossnay unit only (When indoor unit is stopped)	A-control	Possible
	K-control	Not possible
Independent Lossnay unit start and stop (When indoor unit is operating)	A-control	Not possible
	K-control	Not possible
Delayed operation (Optional setting)		30 minute delayed operation when indoor unit cooling/heating is started
Fan speed switching	A-control	High/Low
	K-control	Fixed to high
Ventilation mode		Fixed to automatic
Filter indicator		Not possible
Error		Not possible
Restrictions and precautions		* The Lossnay remote controller cannot be used on systems interlocked with Mr. Slim. When connecting a PZ-41SLB-E to a Lossnay unit, ON/OFF and High/Low operation by the PZ-41SLB-E cannot be reflected to the display of the Mr. Slim's A-control remote controller.

Controller Function Table especially regarded to the Lossnay unit

Model		Local Remote		
		A-control remote controller	K-control remote controller	Lossnay remote controller
		PAR-20MAA		PZ-41SLB-E, PZ-52SF-E
Operation	Start/Stop	○	○	Not used to the interlocked Lossnays
	Fan speed switching	○	×	
	Ventilation mode switching	× (Automatic)	× (Automatic)	
	Priority instructions. Local permitted/prohibited	×	×	
Monitoring	Status (Operation/Stop)	○	○	
	Fan speed switching	○	×	
	Ventilation mode	×	×	
	Error	×	×	
	Error content	×	×	
	Filter sign	×	×	
	Local permitted/prohibited	×	×	

Switched and display ○ : Group only (or function available) × : Not available

- For details about the operation or display of the A-control remote controller (PAR-20MAA), refer to page 91.
- For details about wiring between Lossnay and Mr.Slim, refer to page 25 (5.7 connection Method).

4.6 M-NET Control

4.6.1 Independent Lossnay System with Lossnay M-NET Remote Controller and MELANS

Features

- The Mitsubishi Electric air-conditioner network system (MELANS) can operate and monitor each group of Lossnay units and air-conditioners.
- Can also perform operations using Lossnay M-NET remote controller.

System Examples: 1

The following groups can be configured.

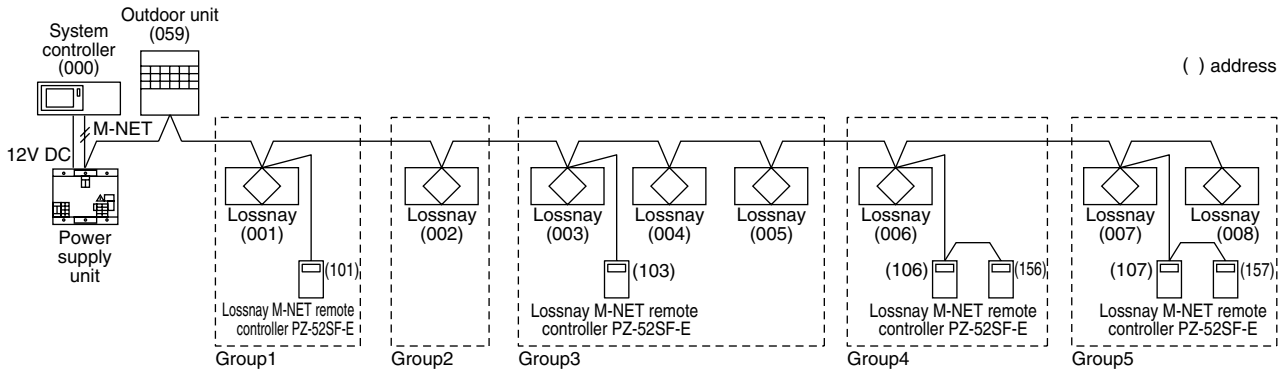

Group 1 : Group of 1 Lossnay unit and 1 Lossnay M-NET remote controller.
Group 2 : Group without Lossnay M-NET remote controller.
Group 3 : Group of multiple Lossnay units and 1 Lossnay M-NET remote controller.
Group 4 : Group of 1 Lossnay unit and 2 Lossnay M-NET remote controllers.
Group 5 : Group of multiple Lossnay units and 2 Lossnay M-NET remote controllers.

Caution:

- Lossnay remote controller PZ-41SLB-E can not be used.

Lossnay Function Table (Group Setting)

Item	Details
Number of Lossnay remote controllers and/or MELANS units that can be connected to 1 Lossnay unit	5 units (Number of Lossnay remote controller is 2 units max.)
Operation of 2 remote controllers in 1 group	Possible
Fan speed switching	High/Low
Ventilation mode	Heat ex. / By-pass / Automatic
Filter indicator	3000 hours / No display
Error	Display

Controller Function Table

Model		Local Remote			MELANS Series				
		Lossnay remote controller	Remote controller	Simple remote controller	Group remote controller	System remote controller	Schedule timer	ON/OFF remote controller	System controller
		PZ-52SF-E	PAR-20MAA PAR-F27MEA	PAC-SE51CRA	PAC-SC30GRA	PAC-SF44SRA	PAC-YT34STA	PAC-YT40ANRA	G-50A
No. of controllable (Groups/Units)		1 Group/16 Units	Not used to the non-interrocked Lossnay			50 Group/50 Units	50 Group/50 Units	16 Group/50 Units	50 Group/50 Units
Operation	Start/Stop	○				◎	◎	◎	◎
	Air volume switching	○				◎	×	×	◎
	Ventilation mode switching	○				◎	×	×	◎
	Priority instructions. Local permitted/prohibited	×				◎	△ *	×	◎
Monitoring	Status (Operation/Stop)	○				◎	◎	◎	◎
	Air volume switching	○				○	×	×	○
	Ventilation mode	○				○	×	×	○
	Error	○				◎	◎	○	◎
	Error content	○				◎	◎	×	◎
	Filter sign	○				○	×	×	○
	Local permitted/prohibited	○				○	×	×	○
Scheduling/ Recording	Weekly	×				×	○	×	○
	Stop/Starts per day	×				×	16	×	6
	Stop/Starts per week	×				×	112	×	42
	Minimum setting (minutes)	×				×	5	×	10
	Error record	×				○	×	×	○

Switches and display

◎ : Group/batch
△ : Available under some condition
* Available as schedule operation
○ : Group only (or function available)
× : Not available

- For details about the operation or display of the Lossnay M-NET remote controller (PZ-52SF-E) refer to page 80.
- For details about the operation or display of the System controller (G-50A) refer to page 84.

4.6.2 City Multi and Lossnay Interlocked System

Characteristics

- Interlocked operation with Mitsubishi air-conditioners is possible.
- Can also perform independent Lossnay operations using MA remote controller or ME remote controller.

System Examples

The following groups can be configured.

Single Refrigerant System

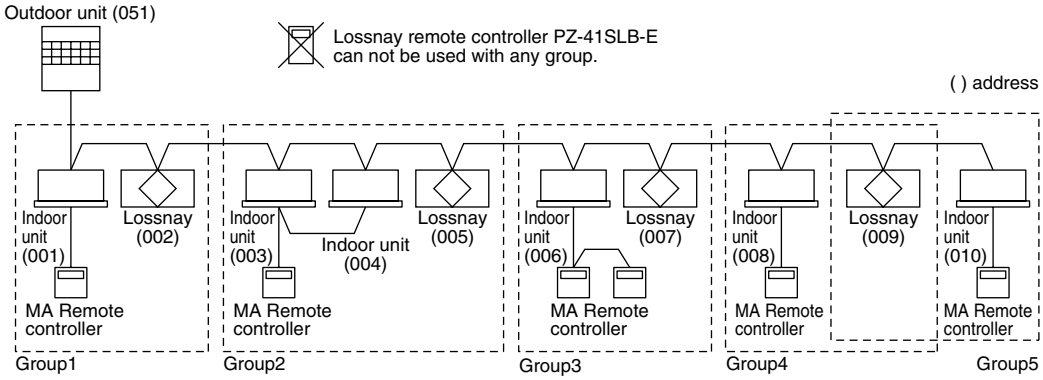

Group 1	:	Group of 1 indoor unit and 1 Lossnay in interlocked operation.
Group 2	:	Group of multiple indoor units and 1 Lossnay unit in interlocked operation.
Group 3	:	Group of 1 indoor unit with 2 remote controllers and 1 Lossnay unit in interlocked operation.
Group 4, 5	:	Group of multiple groups and 1 Lossnay unit in interlocked operation.

Multiple Refrigerants System

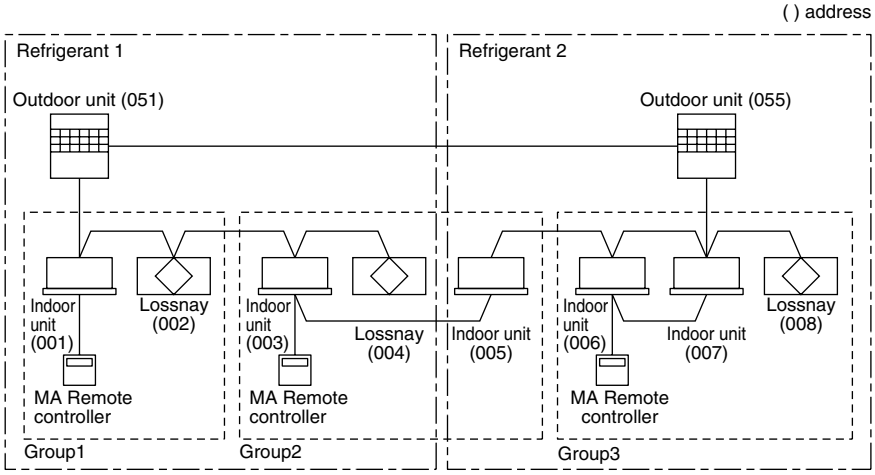

Group 1	:	Group of 1 indoor unit and 1 Lossnay in interlocked operation.
Group 2	:	Group of multiple indoor units (with different refrigerants) and 1 Lossnay unit in interlocked operation.
Group 3	:	Group of multiple indoor units (with same refrigerant) and 1 Lossnay unit in interlocked operation.

Lossnay Function Table (Interlocked Settings)

Item	Details
Number of indoor units that can be set to interlocked operation with 1 Lossnay unit in each group	16 units per group
Number of Lossnay units that can be set to interlocked operation with 1 indoor unit	1 unit
Independent start/stop of ventilation (Lossnay)	Possible
Delayed operation (Optional setting)	30 minute delayed operation when indoor unit cooling/heating is started
Fan speed switching	High/Low
Ventilation mode	Fixed to automatic
Filter maintenance indicator	3000 hours / No display
Error	Display
Restrictions and precautions	* Lossnays cannot be interlocked to the indoor units using K-transmission converter.

Controller Function Table especially regarded to the Lossnay unit

Model		Local Remote			MELANS Series				
		Lossnay remote controller	Remote controller	Simple remote controller	Group remote controller	System remote controller	Schedule timer	ON/OFF remote controller	System controller
		PZ-52SF-E	PAR-20MAA PAR-P27MEA	PAC-SE51CRA	PAC-SC30GRA	PAC-SF44SRA	PAC-YT34STA	PAC-YT40ANRA	G-50A
No. of controllable (Groups (G)/Units)		1 Group/16 Units	1 Group/16 Units	1 Group/16 Units	8 Group/16 Units	50 Group/50 Units	50 Group/50 Units	16 Group/50 Units	50 Group/50 Units
Operation	Start/Stop	○	○	○	◎	◎	◎	◎	◎
	Air volume switching	○	○	×	○	○	×	×	○
	Ventilation mode switching	○	×	×	×	×	×	×	×
	Priority instructions. Hand-held remote, Allowed/Not allowed	×	×	×	×	◎	△ *2	×	◎
Monitoring	Status (Operation/Stop)	○	○	×	○	△ *1	◎	◎	◎
	Air volume switching	○	○	×	○	×	×	×	○
	Ventilation mode	○	×	×	×	×	×	×	×
	Error	○	○	○	◎	◎	◎	◎	◎
	Error content	○	○	○	◎	◎	◎	×	◎
	Filter sign	○	○	×	○	○	×	×	○
	Permit/Prohibit for remote control	×	○	○	○	○	×	×	○
Scheduling/ Recording	Weekly	×	×	×	×	×	○	×	○
	Stop/Starts per day	×	2	×	×	×	16	×	6
	Stop/Starts per week	×	×	×	×	×	112	×	42
	Minimum setting (minutes)	×	10	×	×	×	5	×	10
	Error record	×	×	×	×	○	×	×	○

Switches and display

◎ : Group/batch
○ : Group only (or function available)
△ : Available under some condition
× : Not available
*1 Not displaying which interlocked Lossnay unit by some group is running
*2 Available as schedule operation

● For details about the operation or display of the remote controller (PAR-F27MEA, PAR-20MAA), please refer to those manuals.

4.6.3 MA Remote Controller/ME Remote Controller in Combination with Lossnay M-NET Remote Controller

System

The MA remote controller, ME remote controller, and Lossnay M-NET remote controller can be used in combination.

Combination of Air Conditioner Remote Control and Lossnay Remote Control

Indoor Unit	Lossnay LGH-RX4-E
Model for MA remote control (Type C or later)	◯
Model for other than MA remote control (Type B or earlier)	×

◯ : Compatible × : Incompatible

System Examples: 1

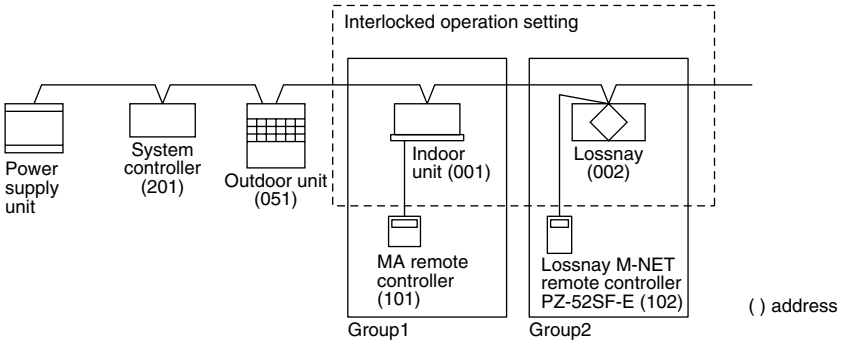

Setting Method

(1) Make the Group setting for the indoor unit.
(2) Make the Group setting for the Lossnay unit.
(3) Set the indoor unit and Lossnay unit in interlocked operation.
When using the system controller, make both the Group setting and operation setting for the previously mentioned units.

Characteristics

(1) When the indoor unit is set for interlocked operation in 1 group:
Interlocked operation with the indoor unit from the air conditioner remote controller is possible and can switch between High/Low/Off.
From the air conditioner remote controller it is possible to switch the Lossnay only between High/Low/Off.
From the Lossnay remote controller it is possible to switch the Lossnay between High/Low/Off.
(2) When the 2 or more indoor units with different group are set for interlocked operation, the Lossnay will operate if at least 1 group operates. The Lossnay will stop operation if all groups stop operation.
From an air conditioner remote controller it is possible to switch the Lossnay only between High/Low when other groups are operating.
From the Lossnay remote controller it is possible to switch the Lossnay between High/Low/Off.

Note:

- If the display on the MA remote controller/ME remote controller, or other air conditioner remote controller, is cancelled, the air conditioner remote controller will not show the ventilation display even if you operate the Lossnay from the Lossnay M-NET remote controller.

Note:

Transmission cable power control for indoor units
Be sure usage is within the following boundaries.

- Indoor units + ME remote controllers (compact remote controllers) + Lossnay M-NET remote controllers is less than or equal to 40 units.
- Indoor units are less than or equal to 20 units.
(The numbers of MA remote controllers and Lossnay units are not included in the above number of units.)

System Examples: 2

A mixed system including the City Multi can also be configured.

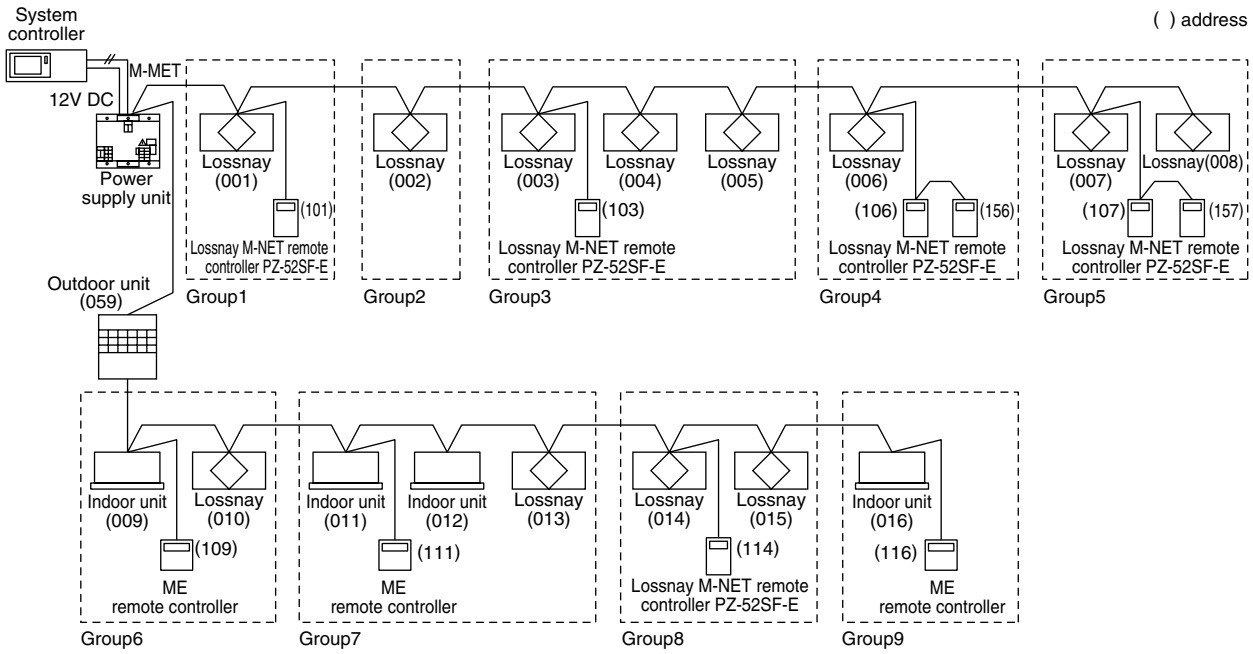

Group 1	:	Group of 1 Lossnay unit and 1 Lossnay M-NET remote controller.
Group 2	:	Group with no Lossnay M-NET remote controller.
Group 3	:	Group of multiple Lossnay units and 1 Lossnay M-NET remote controller.
Group 4	:	Group of 1 Lossnay unit and 2 Lossnay M-NET remote controllers.
Group 5	:	Group of multiple Lossnay units and 2 Lossnay M-NET remote controllers.
Group 6	:	Group of 1 indoor unit and 1 Lossnay unit in interlocked operation.
Group 7	:	Group of multiple indoor units and 1 Lossnay unit in interlocked operation.
Group 8	:	Group of multiple Lossnay units connected to an indoor unit transmission cable and 1 Lossnay M-NET remote controller.
Group 9	:	Group with no Lossnay units.

Note:

- Do not use Lossnay remote controller PZ-41SLB-E in case of a system using M-NET transmission cable.

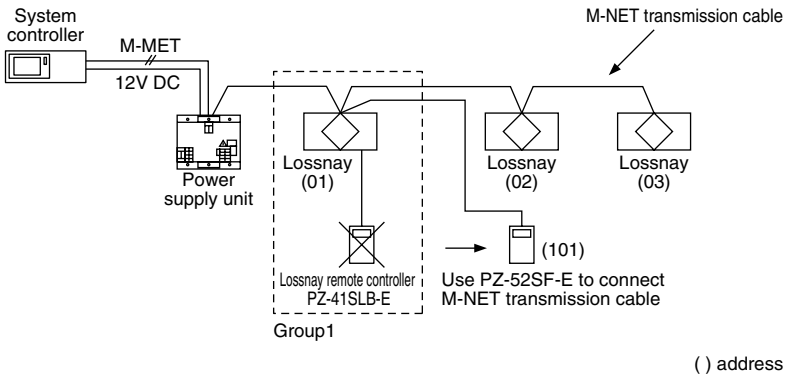

4.6.4 When Using the LONWORKS® Compatible Adaptor (LMAP02-E) to Connect to LONWORKS®

By using the LON® adaptor (model name: LMAP02-E), it is possible to control and observe Lossnays on a building management system using the LONWORKS®.

* For specifications and functions of the LON® adaptor, refer to the materials regarding the LONWORKS® compatible adaptor.

Table of Functions

	Contents	Individual Lossnay (Lossnay not set for interlocked operation)	Interlocked Lossnay (Lossnay set for interlocked operation with City Multi)
Operation	ON/OFF	○	×
	Change fan to High/Low	○	×
	Change ventilation mode	○	×
	Local prohibit ON/OFF	○	×
Observation	Operation condition	○	×
	Fan speed	○	×
	Ventilation mode (conditions)	○	×
	Errors	○	○
	Filter maintenance sign	○	×
	Local prohibit ON/OFF state	○	×

System Example

(Using M-NET)

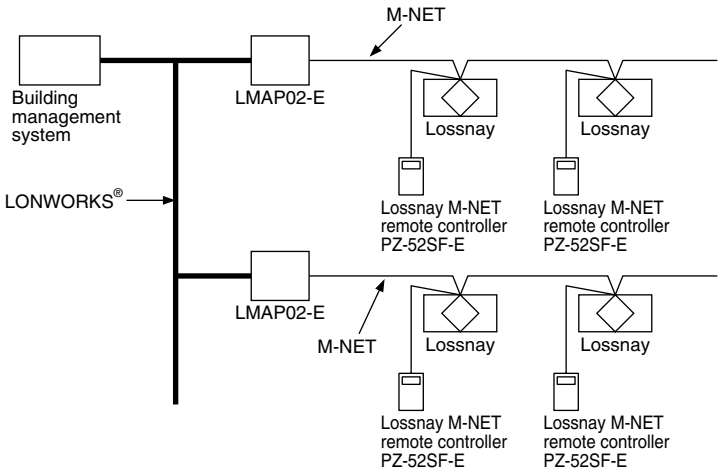

Connect the M-NET transmission cable to TB5 A, B of the Lossnay terminal block. (Refer to page 68).
The Lossnay remote controller (PZ-41SLB-E) can not be used with this system.
Up to 50 units can be connected with 1 LMAP02-E.
For details about the system or connection cables of the LMAP02-E, refer to the technical materials, etc., regarding the LMAP02-E.

* LONWORKS® is a registered international trademark, registered in the U.S.A to the Echelon Corporation.

5. Examples of Applications Using External Control Input Terminals, Operation Monitor Output Terminals and Malfunction Monitor Output Terminals

Various applications are possible by using the input/output terminals as shown below.

Input/Output Specifications

	Terminal	Specification	Page
1	External control input terminal block (TM2 ①, ②, ③)	This is the input terminal block for start/stop the Lossnay unit using external equipment, such as a Mr. Slim (A-control or K-control) indoor unit or the BMS (Building Management System). Signal input can be by voltage (12V-24V DC) or uncharged a-contact signal. (Both voltage and no-votage signals are compatible with pulse input. Set DIP switch 2-2 to ON. A pulse signal duration of 200 ms or more is needed.)	22/24 to 27
2	Operation monitor output terminal block (TM3 ⑨, ⑩)	Output terminal during Lossnay unit operation. (uncharged a-contact signal output.) Contact point rating: 2A/240V AC Within 2A/24V DC	25
3	Malfunction monitor output terminal block (TM3 ⑦, ⑧)	Output terminal during Lossnay unit malfunction. (uncharged a-contact signal output.) Contact point rating: 2A/240V AC Within 2A/24V DC	26

Lossnay Main/Sub Setting

For a multiple Lossnay system that will begin operation from one signal from an air conditioner or the like, make sure the unit connected to the signal cable from the air conditioner is set to “Main,” and all the others are set to “Sub.” (Refer to page 66)

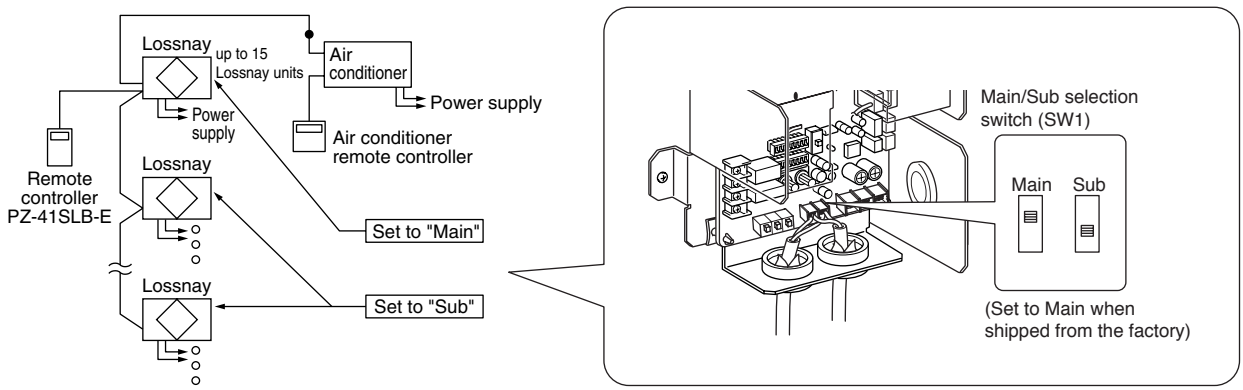

5.1 External Control Operating Mode Selection

There are four modes when operating using signals from external equipment.

1. ON/OFF interlock (the last trigger from either external signal or remote control switch has priority)
2. ON interlock
3. OFF interlock
4. External priority ON/OFF interlock

Operating Signal

Mode	When external signal is level signal.	When external signal is pulse signal. (Optional setting)
ON/OFF inter-lock	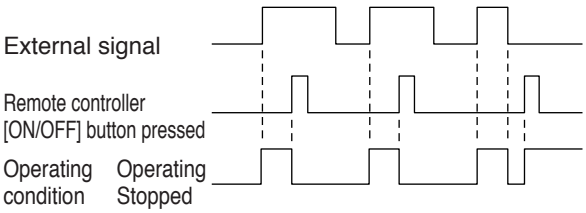	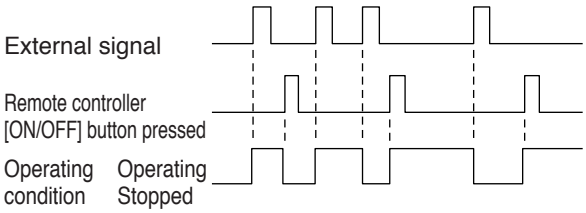
ON inter-lock	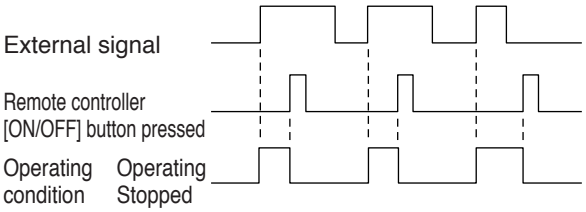	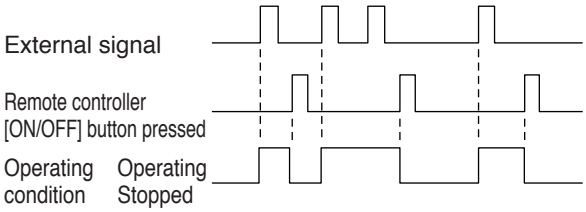
OFF inter-lock	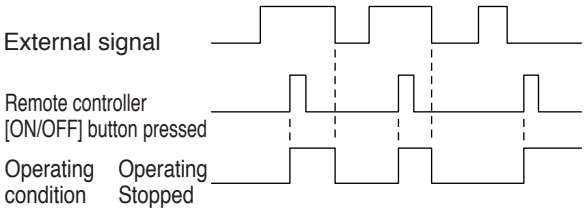	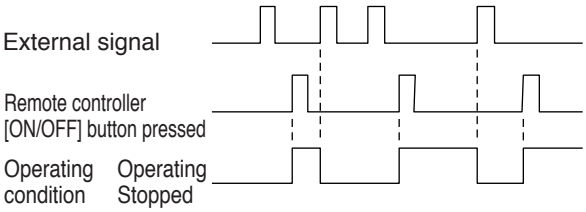
External priority ON/OFF inter-lock	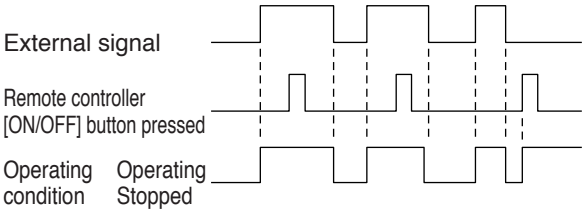	This mode does not exist.

Setting Method

When PZ-41SLB-E is used . . . . . Set with the remote controller. (Refer to page 78)
When PZ-41SLB-E is Not used . . . Set with the dip switch. (Refer to page 72)

5.2 Delayed Interlocked Operation (PZ-41SLB-E, M-NET)

(1) It is possible to delay operation of the Lossnay with respect to the operation of the external device. (Energy saving effect.)
(2) The times that can be set for delayed operation are 10, 20, 30, 40, 50, and 60 minutes.
(3) Delayed operation does not occur if the Lossnay operation was cancelled within the last 2 hours.
(If turned off for a short time, for example during a lunch break, if the direction to restart operation is given within 2 hours, the Lossnay will restart immediately.)
(4) If an operation button is pressed on the remote controller while the delay timer is operating, the delayed operation is cancelled and normal operation begins.

Setting Method

When PZ-41SLB-E is used . . . . . Set with the remote controller. (Refer to page 78)
When PZ-41SLB-E is Not used . . . Set with the dip switch but fixed only for 30 minutes. (Refer to page 72)

5.3 Multiple External device Operation (PZ-41SLB-E, M-NET)

When there are multiple air conditioners or other external devices		
Characteristics	**Ordered parts**	**Notes**
Lossnay operates when any of the external devices operate.	Remote controller	• External signals that can be received are listed below. Level signal, uncharged a-contact • If the external device is a pulse signal or charged signal multiple connections can not be made.

System Example

When the Operation Signal is a Uncharged a-contact Level Signal

(Signal cable for space between Lossnay and remote controller is less than 500 m.)
PVC cable ϕ 0.65 to 1.2 or strand wire 0.3 mm^2 to 1.25 mm^2.

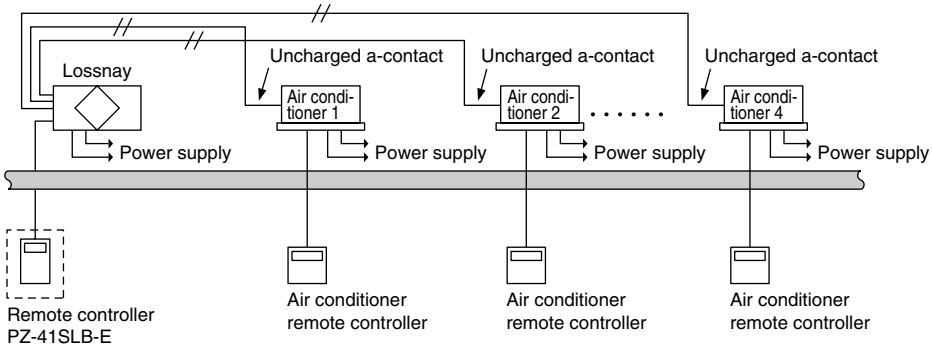

* Illustration shows an example when using PZ-41SLB-E.

5.4 Multiple Lossnay Units in Interlocked Operation with One Indoor Unit. (M-NET only)

[Example: System 1]

Set the Main/Sub switch of the Lossnay connected to the M-NET transmission cable to “Main,” set the second and following Lossnay units to “Sub,” and connect TM4 of the Lossnay remote controller’s (PZ-41SLB-E) transmission cable terminal to the corresponding point on the next unit. (Refer to page 66)

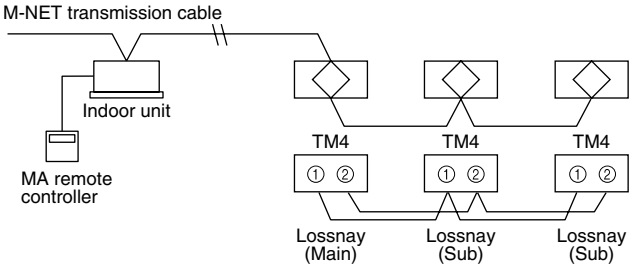

(One Point Advice)

Register the first Lossnay unit and the indoor unit to be interlocked.
It is not necessary to set the address or direct control for the second or following Lossnay units.
Malfunctions of the Lossnay units after the second unit will not appear on the remote controller.

[Example: System 2]

When you want to also manage the abnormalities of the Sub set Lossnays by a system controller.
Wire all the TM4 of Lossnays, make the main/sub switch of the Lossnay of the youngest address into the “Main”, and make other Lossnays setup at “Sub.”
From a system controller, carry out group registration of an indoor unit and Lossnays, respectively, and perform a interlocking setup with an indoor unit and a Lossnay of the youngest address in a group.

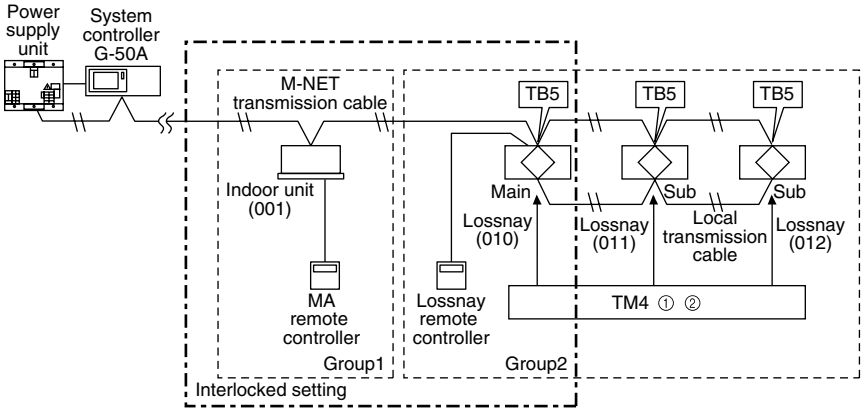

The inside of ( ) is an address number.

[Example: System 3]

Use the Lossnay remote controller to set the air conditioners and Lossnay units to separate groups. Both interlocked operation of an air conditioner and Lossnay units can be performed independently by connecting the remote display output for the indoor unit and the external control input for the Lossnay unit.

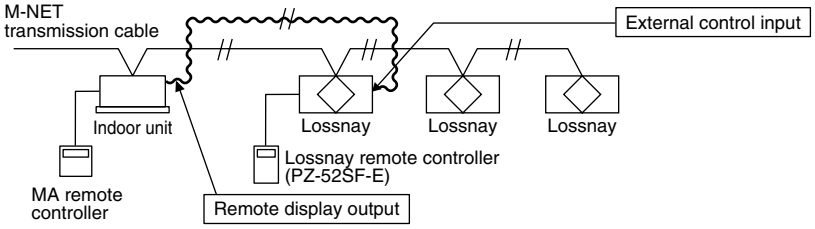

(One Point Advice)

Do not register the indoor unit and Lossnay unit to be interlocked. In addition, ventilation switch on the MA remote controller will be invalid, and the Lossnays’ error indicator will appear only on the Lossnay remote controller.

5.5 Interlocked Operation of Equipment such as the Electrically Operated Damper and Booster Fan. (M-NET only)

[Example System]

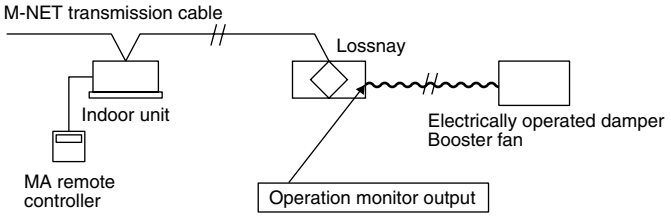

5.6 To Pick Up an Error Signal Externally (PZ-41SLB-E, M-NET)

[Example System]

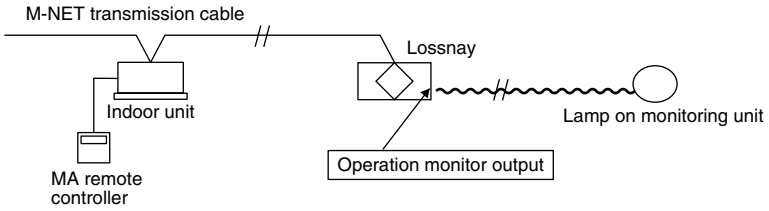

5.7 Connection Method (PZ-41SLB-E, M-NET)

1. Using a Mr. Slim (A-control or K-control) indoor unit

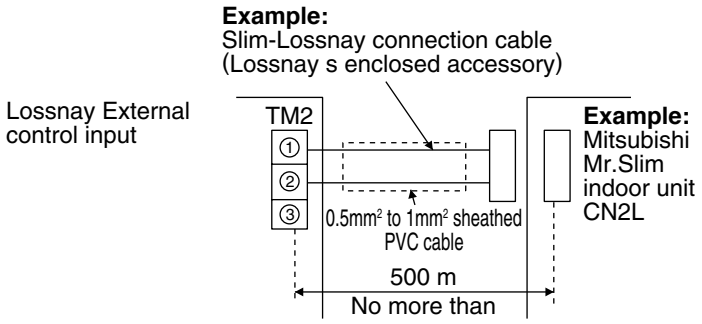

If other models are used, refer to the operating manual for those models.

2. Using a 12V DC or 24V DC voltage signal

[When voltage pulse signal (12V DC or 24V DC) is used]

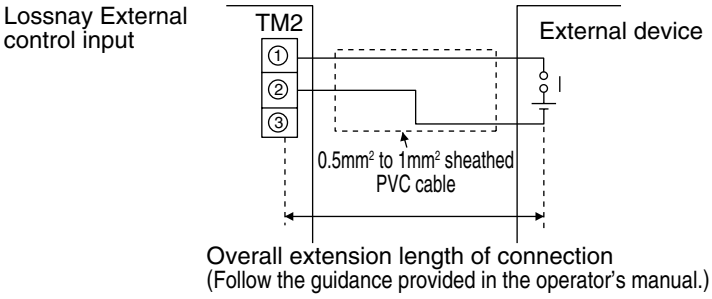

Connect the signal output to between TM2 ① and ②. (Non-polar)

3. Uncharged a-contact

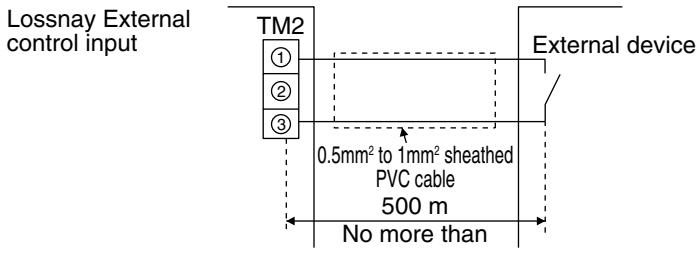

If an optocoupler or any other type of polar coupler is used at the uncharged a-contact, connect the ⊕ to ③ and the ⊖ to ①.

4. Many uncharged a-contacts.

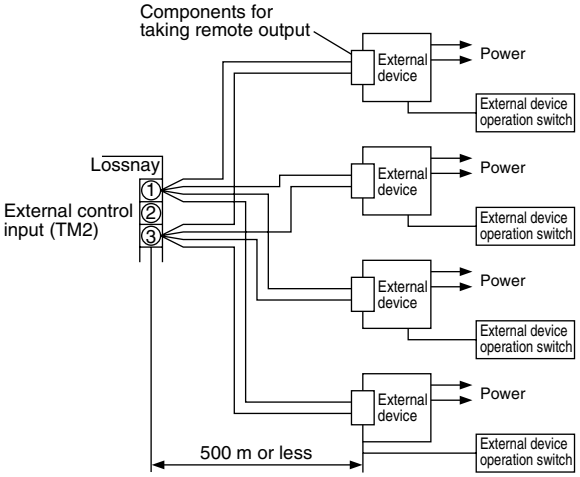

Connect ① and ③ of the external control input terminal (TM2) through the component for taking remote output at the uncharged a-contact.

Note:

- If an optocoupler or any other type of polar contact is used at the uncharged a-contact, connect the ⊕ to ③ and the ⊖ to ①.

5. Connecting to equipment such as an electrically operated damper and picking up the operating signals.

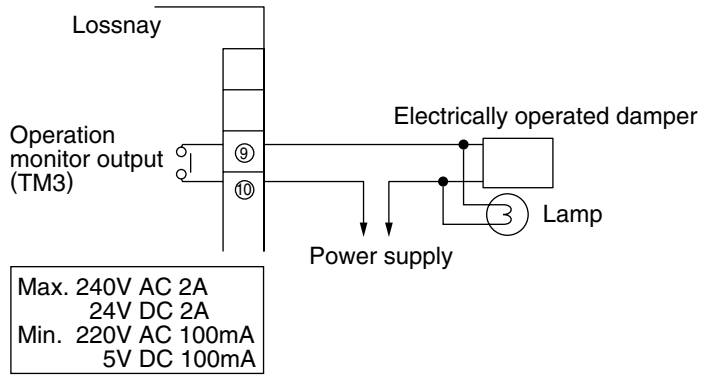

Connect the power supply cable from the electrically operated damper to ⑨ and ⑩ of the operation monitor output terminal (TM3).

Note:

- The response time to an external control input signal is shown in the table below.

External Signal Type	Response Type
Level signal	Maximum 7 seconds
Pulse signal	Maximum 200 milliseconds

6. Picking up an error signal.

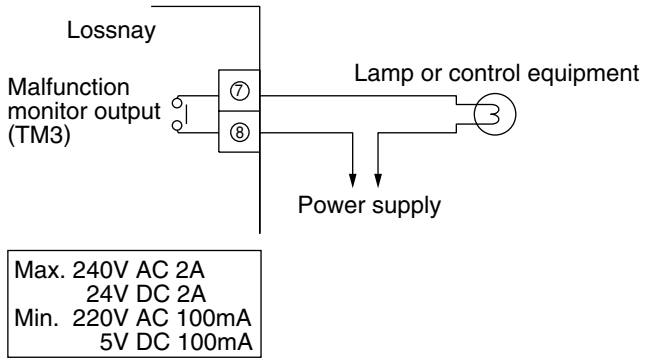

Connect to ⑦ and ⑧ of Malfunction monitor output terminal (TM3)

7. When operating by power ON/OFF without using the remote controller.

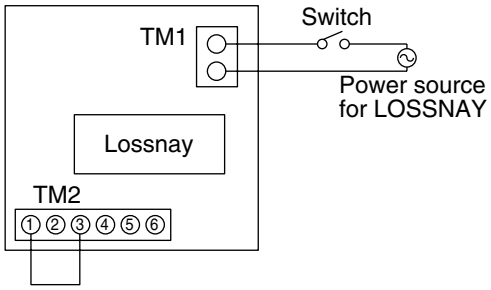

Connect as left Wiring diagram.
When the Switch ON, the LOSSNAY unit will begin to operate.

*LOSSNAY FAN speed can be selected (High/Low) by dip switch2-4 and 5.
*Ventilation mode (LOSSNAY/Bypass) is fixed to automatic.

5.8 High/Low Change Input (PZ-41SLB-E, M-NET)

The fan speed of the Lossnay can be changed externally by using a commercially available CO_2 sensor, etc. The separately sold remote ON/OFF adaptor (PAC-SE55RA-E) is necessary for connection.

Connection Method

● Externally Directed “High” fan speed Operation

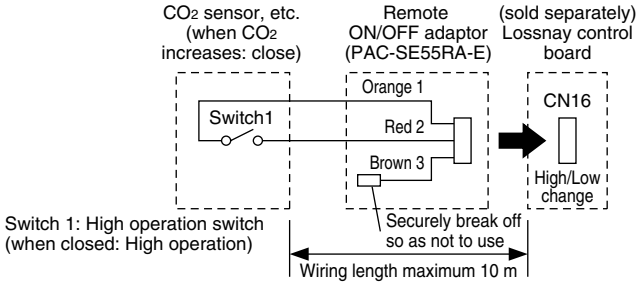

When switch 1 is ON, the Lossnay operates at the "High" fan speed regardless of the remote controller setting.
If you usually ventilate at "Low" fan speed operation, switch to "High" fan speed operation when the external sensor shows the air quality going down.

● Externally Directed “Low” fan speed Operation

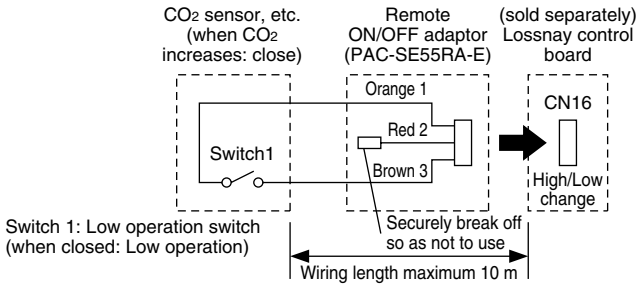

When switch 1 is ON, the Lossnay operates at the "Low" fan speed regardless of the remote controller setting.
If you usually ventilate at "High" fan speed operation, switch to "Low" fan speed operation when the external sensor shows few impurities in the air.

1 When using PZ-41SLB-E to connect multiple units

- Connect the sensor to the Lossnay with the “Main” setting.
- It is not necessary to connect to any Lossnay with the “Sub” setting.
- Connect any sensor, etc., connected to external change input to the Lossnay with the “Main” setting.
- Any Lossnay with the “Sub” setting will operate at the same High/Low setting as the Lossnay with the “Main” setting when there is sensor signal input.

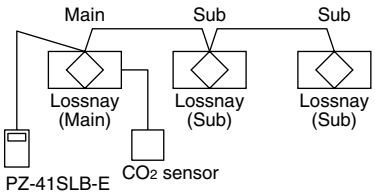

2 When using M-NET for a group of multiple units

- For multiple groups, connect the sensor to each Lossnay.
- Even if the units are in the same group, you can only change Lossnay units connected to the sensor between High/Low operation.

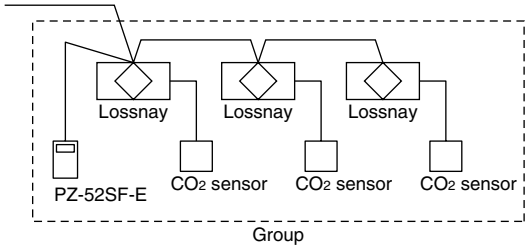

Note:

- When using the M-NET system, the fan speed being input by this sensor signal will not be displayed on the remote controller.

5.9 Remote/Local control Change and ON/OFF Input (M-NET only)

The separately sold remote ON/OFF adaptor (PAC-SE55RA-E) is necessary for connection. Remote/Local changing is impossible when using PZ-41SLB-E.

- Insert the separately sold remote ON/OFF adaptor (PAC-SE55RA-E) into CN32 on the Lossnay control table

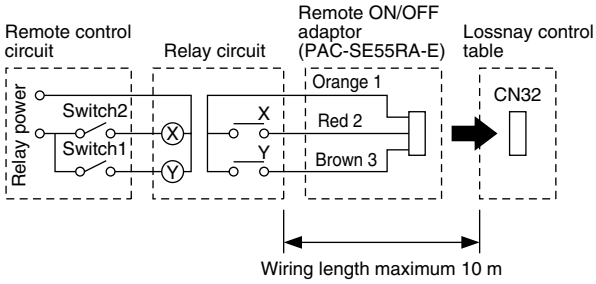

Switch 1 : When on, can not use the local remote controller (PZ-52SF-E) to turn ON/OFF.
* When using PZ-41SLB-E, Remote/Local changing is impossible.

Switch 2 : When Switch 1 is ON, you can turn Switch 2 ON to operate the Lossnay, or turn Switch 2 to OFF to turn off the Lossnay.

Switch 1 : Remote/Local change switch
Switch 2 : ON/OFF switch

X, Y : Relay (Contact rating DC 1 mA)

Note:

- External control input and Remote/Local changing can not be used at the same time.

6. Precautions When Designing Systems of M-NET

6.1 Power Supply of the M-NET Transmission Cable

On an M-NET system, the remote controller or central controller operate on power received from the transmission cable. Accordingly, there is need to provide power to the transmission cable.
There are two systems for supplying power. The central system is supplied by a power supply unit. The indoor unit system is supplied by a outdoor unit. The Lossnay and the Lossnay remote controller can be connected to either system.

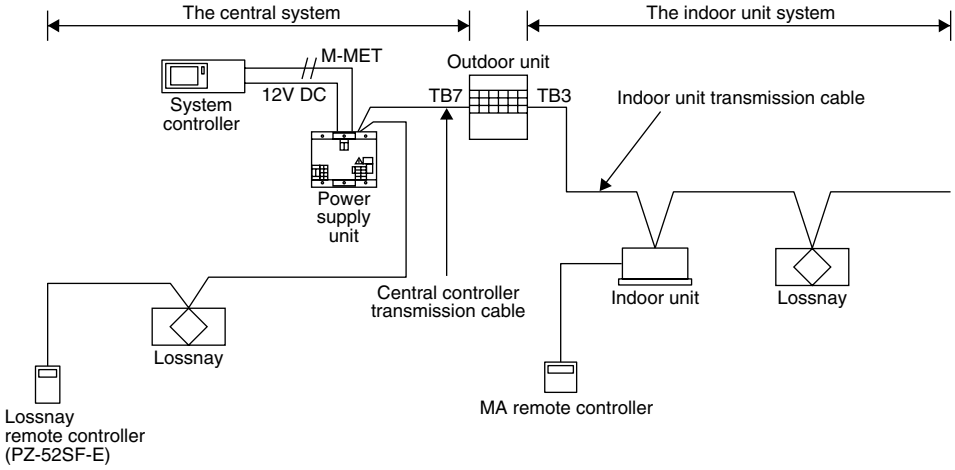

6.2 Restrictions When the Lossnay Units are Connected to the Central Controller M-NET Transmission Cable.

Due to the limited capacity of the power supply unit, the number of Lossnay remote controllers is restricted when the Lossnay M-NET remote controllers and Lossnay units are connected to the central controller transmission cable.
This does not apply to Lossnay units and G-50A that do not receive power from the central controller transmission cable.

Central controller Model		Non	PAC-SF44SRA 1 unit	PAC-YT40ANRA 1 unit
Number of Lossnay M-NET remote controllers that can be connected.	Power supply unit PAC-SC50KUA	Max. 24 units	Max. 22 units	Max. 20 units
	Transmisson Booster PAC-SF46EPA	Max. 50 units	Max. 48 units	Max. 46 units

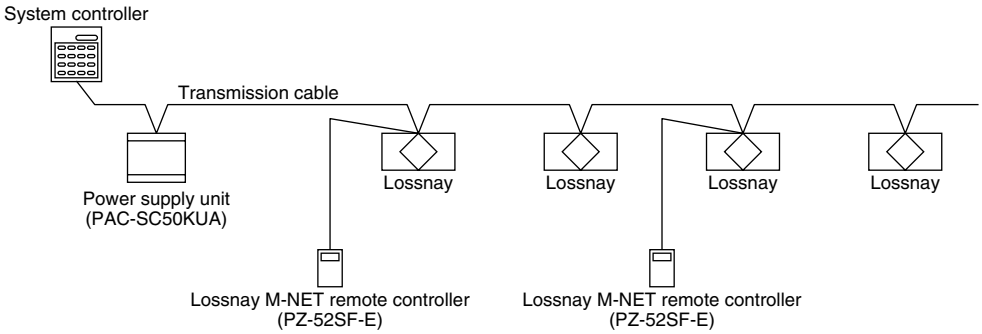

- In the case that a greater number of Lossnay remote controllers than that shown above is connected due to the use of a power supply unit (PAC-SC50KUA), a transmission booster (PAC-SF46EPA) becomes necessary.
- Transmission Booster (PAC-SF46EPA) can be used without a power supply unit (PAC-SC50KUA) if TB2 (OUTDOOR UNIT SIDE) is opened, and the M-NET transmission cable is connected to TB3 (ADDITIONAL INDOOR UNIT SIDE).

Power consumption of each central controller

Model		Conversion to the Number of Lossnay remote controllers
System remote cotroller	PAC-SF44SRA	Power consumption of 2 Lossnay remote controller units
ON/OFF remote cotroller	PAC-YT40ANRA	4 units
Schedule timer	PAC-YT34STA	2 units

6.3 Wiring Example

Example

<System controller and Lossnay units>

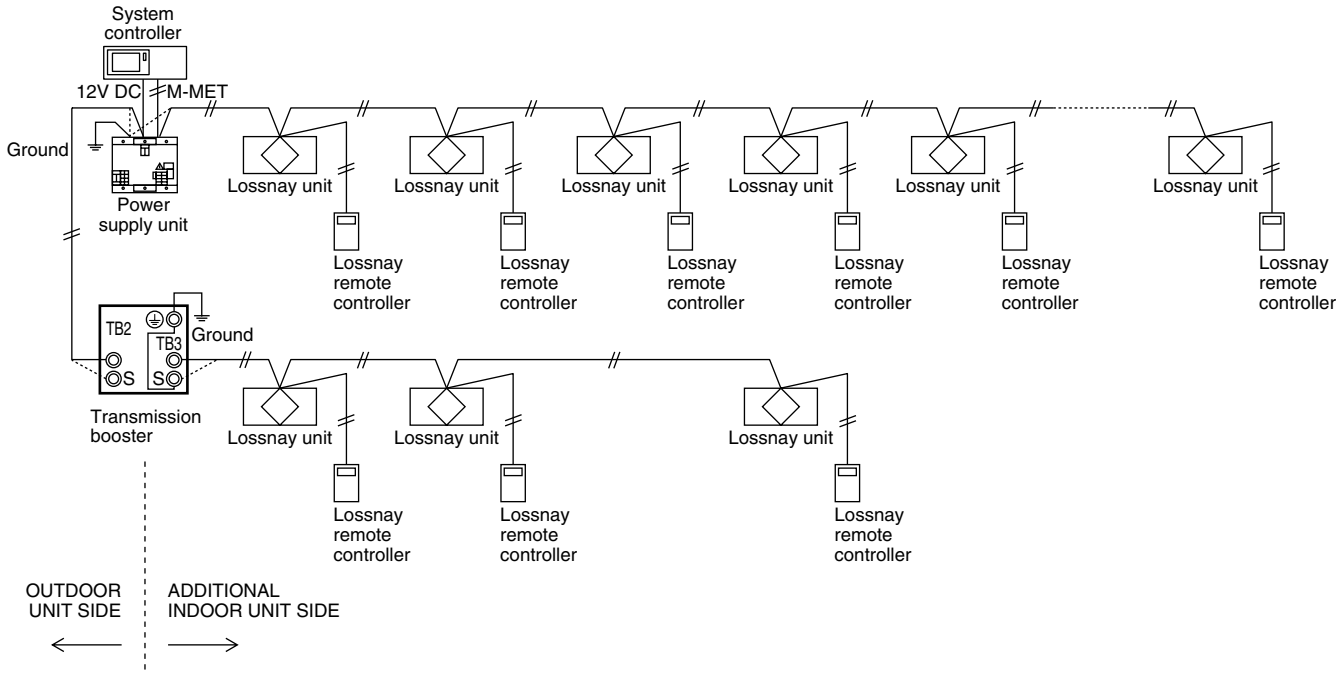

Note:

- This unit cannot be used to extend the transmission cable.

6.4 Power Supply to the Indoor Unit Transmission Cable.

In principle, the number of indoor units ME remote controllers and Lossnay M-NET remote controllers that can be connected to one outdoor unit will depend on the type of outdoor unit. The following are the general guidelines when connecting multiple indoor units and Lossnay units to an outdoor unit.

Indoor units + Remote controllers (Simple remote controllers) + Lossnay M-NET remote controllers ≦ 35
* MA remote controllers and Lossnay unit's are Not counted.

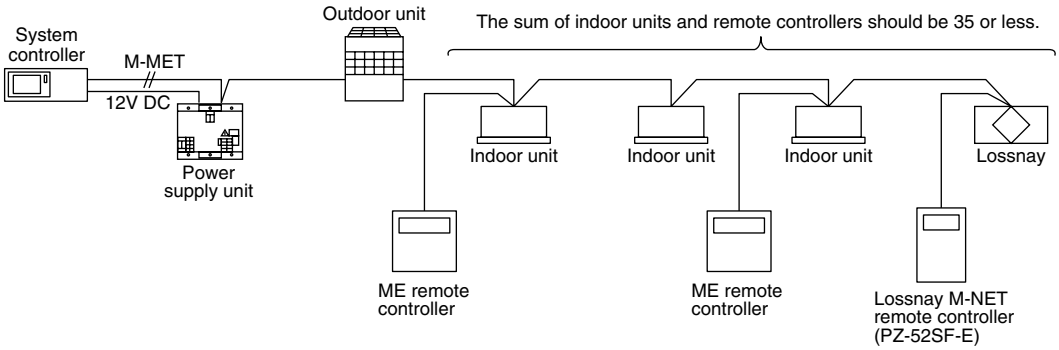

7. Cable Installation of the M-NET

7.1 Precautions When Installing Wiring.

1. When routing transmission cable outside of the unit, position it 5 cm or more away cable for the power supply so that it will not pick up electrical noise. (Never use multi-core cable or place the transmission cable in the same conduit as the power supply cable.)
2. Never connect the power cable to the terminal block for the transmission cable. This erroneous connection will burn out the circuit board.
3. Always use 2-core cable for the transmission cable. Routing this transmission cable with the transmission cable from another system on the same multi-core cable will result in erroneous sending and receiving of signals which will cause misoperation.
4. Never wire a transmission cable in the shape of a loop. Reception of a transmission signal becomes impossible.

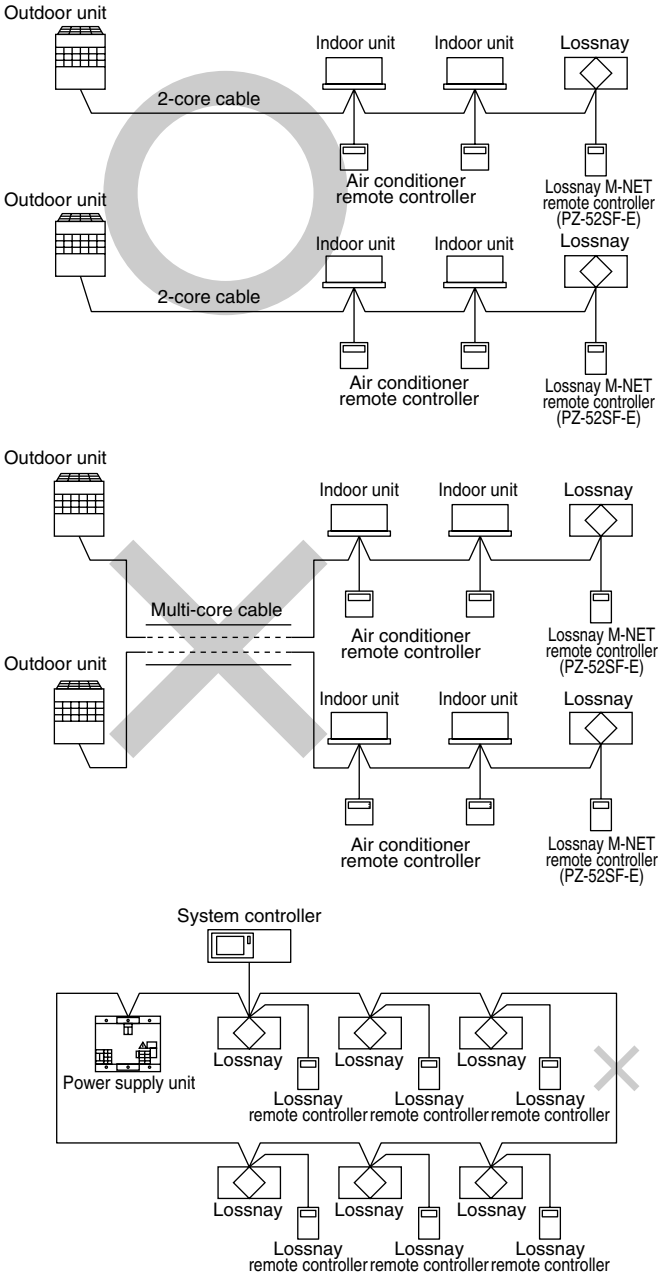

7.2 Electrical Wiring

Types of control cables

1. Wiring the M-NET transmission cables

- Types of transmission cables
  Shielded cable, such as CVVS or CPEVS.
  CVVS : PVC insulated PVC jacketed shielded control cable
  CPEVS : PE insulated PVC jacketed shielded communication cable
- Cross-sectional area
  1.25 mm^2 to 2.00 mm^2

2. Lossnay M-NET remote controller (PZ-52SF-E)

	Lossnay M-NET remote controller
Type of cables	Non-shielded cable up to 10 m in length sheathed PVC (2-core) 0.75 mm^2 to 1.25 mm^2 or equivalent. (The same specifications as table 1 for more than 10 m.)
Length	Add any portion exceeding 10 m up to the longest permissible transmission cable length of 200 m. (Shielded sections shall have a cross-sectional area of 1.25 mm^2 to 2.00 mm^2.)

7.3 Length of Control Cable

- Maximum power supply cable length. (L1 + L2, L1 + L3, L1 + L4): The longest length of the cable from the power supply unit or the indoor unit to the farthest terminal shall be less than 200 m.
- Maximum distance between ends (L2 + L3, L2 + L4, L3 + L4): The length of cable between ends shall be less than 500 m.
- Remote controller cable length (ℓ): The distance between the remote controller and the terminal connected to it shall be 10 m or less.

System Example

When using Lossnay remote controller or ME remote controller.

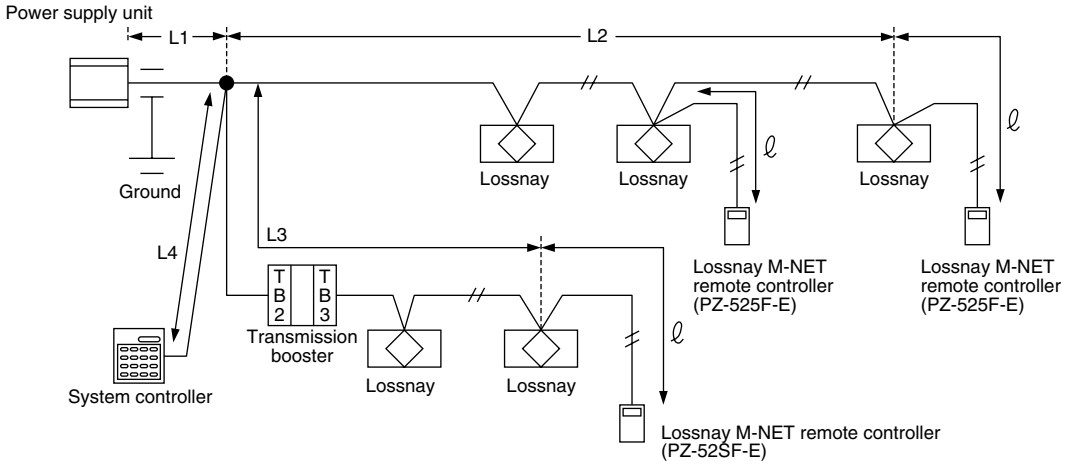

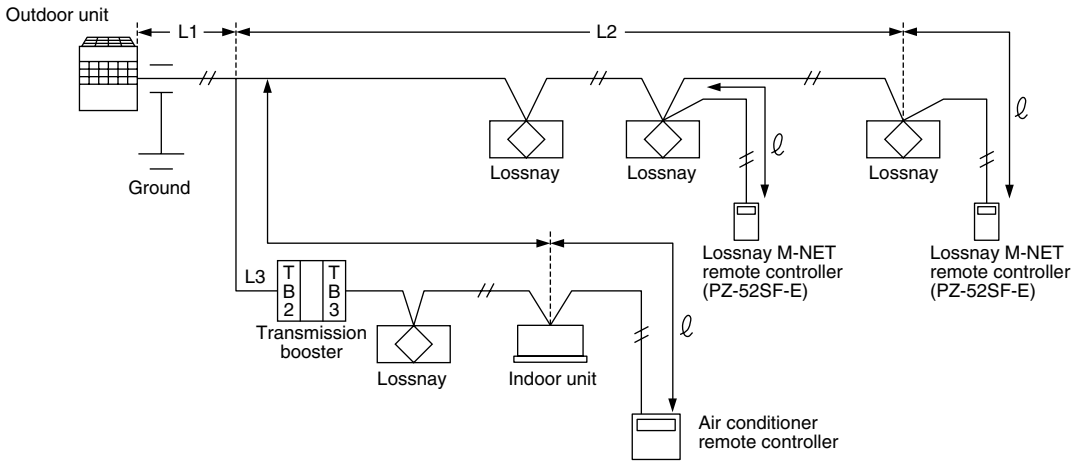

Please:

- Always install the ground cable for the transmission cables in the following way. Route the central control system through the power supply unit. Route the indoor unit system through the ground terminal on the outdoor unit.
- If the cable length (ℓ) for the remote controller exceeds 10 m, use 0.75 mm^2, change the section exceeding 10 m to the cable having a cross-sectional area of 1.25 mm^2 to 2.0 mm^2. Add the exceeding section within the “maximum power supply cable length” restriction of 200 m and the “maximum distance between ends” restriction of 500 m.
- If the cable exceeds the maximum cable length and overall extended length, voltage will drop and cause malfunctioning.

8. System Designs of M-NET

8.1 Address Definitions

An address is a unique number used to identify each air conditioner and controller.

Unit		Address setting	Example	Note
Indoor unit Lossnay		01 to 50	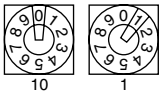	Use the most recent address within the same group of indoor units. Make the indoor units address connected to the BC controller (Slave) larger than the indoor units address connected to the BC controller (Master).
Outdoor unit Heat source unit		51 to 99, 100	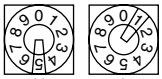	The smallest address of indoor unit in same refrigerant system +50. *The address automafically becomes “100” if it is set as “01 to 50”.
BC controller (Master)		52 to 99, 100	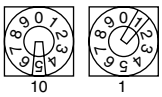	The address of outdoor unit +1. *Please re-sel another address between 01 and 50 when two address overlap. *The address automafically becomes “100” if it is set as “01 to 50”.
BC controller (Slave)		53 to 99, 100	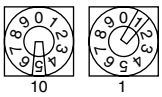	Lowest address within the indoor units connected to the BC controller (Slave) plus 50.
Local remote controller	M-NET, LOSSNAY Remote controller (Main)	101 to 150	1 Fixed 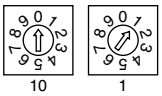	The smallest address of indoor unit in the group + 100. *The place of “100” is lixed to “1”.
Local remote controller	M-NET, LOSSNAY Remote controller (Sub)	151 to 199, 200	1 Fixed 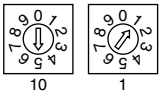	The address of main remote controller +50. *The address automatically becomes “200” if it is set as “00”.
System controller	Group remote controller	201 to 250	2 Fixed 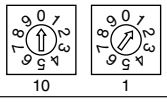	The smallest group No. to be managed +200.
System controller	System remote controller ON/OFF remote controller	000, 201 to 250	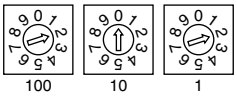	
System controller	Schedule timer	202 to 250	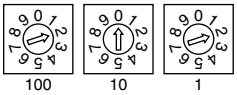	
System controller	G-50A	000, 201 to 250	Set up on display	
System controller	LMAP02-E	201 to 250	2 Fixed 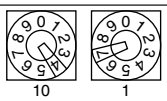	

Note:

- There is no need to set the address unless the Lossnay is connected to the M-NET transmission cable.

System configuration example

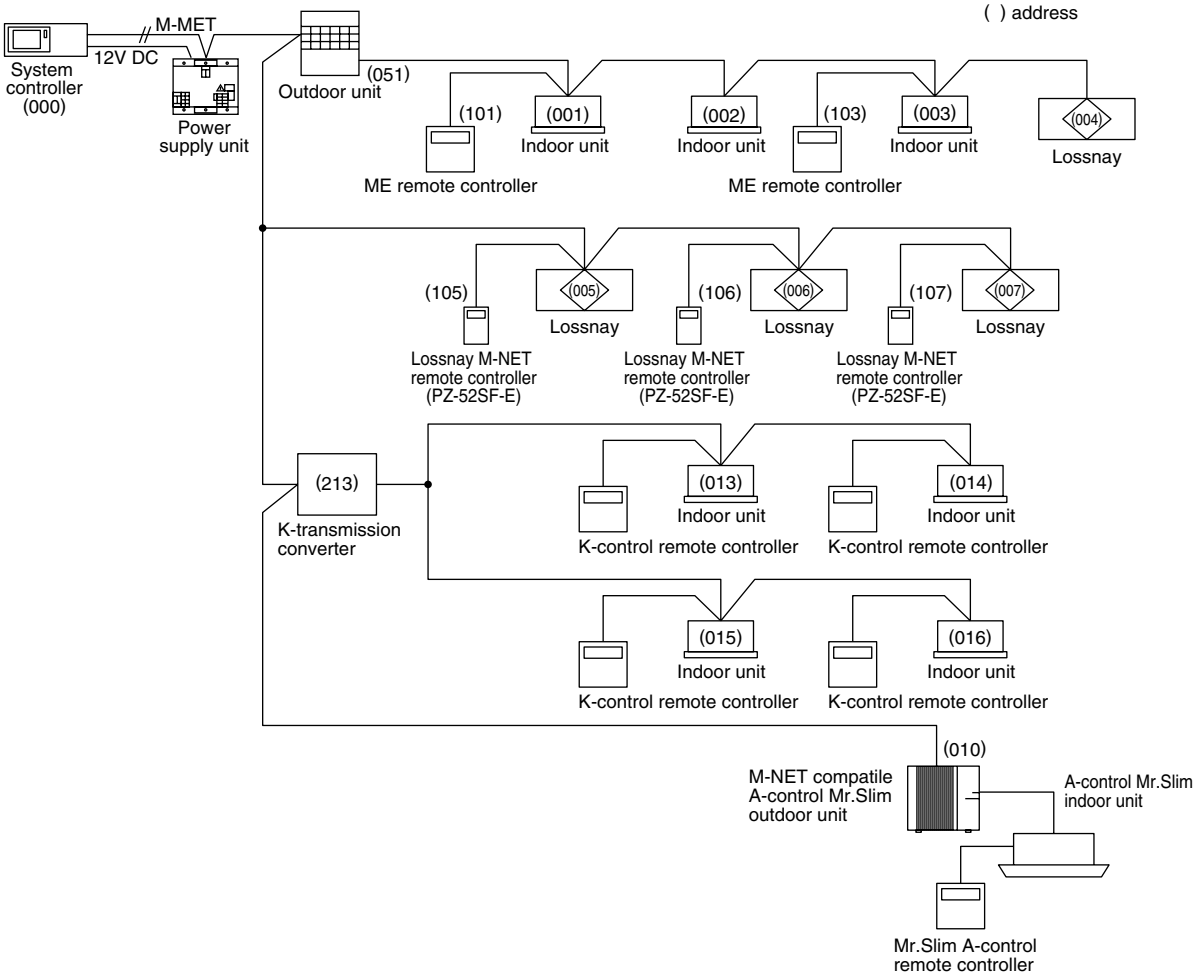

8.2 Precautions When Performing Group Settings (when not interlocked with City Multi indoor unit)

Precautions	
1	The maximum number of Lossnay units in one group is 16. (Refer to page 15.)
2	When two remote controllers are used within the same group, set one remote controller as the master (address 101 to 150) and the other as the slave (address 151 to 200). (Refer to page 14.)
3	Group settings: ① Perform group settings at the System Controller when being used. If 2 or more System Controllers are being used in combination, perform them at the host one. (Refer to page 86.) ② If a System Controller is not being used, use the Lossnay remote controller to perform the settings. (Refer to page 83.)
4	Do not set air conditioners and Lossnay units in the same group. If these units are set to the same group, the indoor unit or Lossnay will not operate.
5	Turn on the power source for the Lossnay when performing group settings.
6	If the group settings are performed by MELANS, be sure to also set the address for the Lossnay remote controllers to the group setting. If the remote controller address is not registered, “H0” remains displayed and the system does not start up.
7	No more than three Lossnay remote controllers can be set to the same group in a system using a System Controller.

8.3 Precautions When Performing Interlock Settings (when interlocked with City Multi indoor unit)

Precautions	
1	The maximum number of indoor units that can be interlocked is 16. (Refer to page 17.)
2	1 Lossnay can be interlocked with an indoor unit. (Refer to page 17.)
3	Interlock settings: ① Perform interlock settings at the System Controller when being used. If 2 or more System Controllers in combination, perform them at the host one. (Refer to page 86.) ② When MA or ME remote controllers are being used except above ①: Use the MA or ME remote controller for the interlock settings. (If ① or ② do not apply, interlock settings cannot be made.)
4	Do not register the Lossnay units to the other Lossnay’s group. In this case, the Lossnay units aren’t interlocked to the other Lossnay’s group.
5	When performing the settings using a MA or ME remote controller, always set for interlocked operation to the smallest address indoor unit in a group. If the setting is not made in this manner, the message “This function is not available” will appear when operating the ventilation button and interlocking with the Lossnay unit will not be possible.
6	Turn on the power source for the Lossnay when performing interlock settings.

9. Automatic Ventilation Switching

9.1 Effect of Automatic Ventilation Mode

The automatic damper mode automatically provides the correct ventilation for the conditions in the room. It eliminates the need for troublesome switch operations when setting the Lossnay ventilator to “By-pass” ventilation. The following shows the effect “By-pass” ventilation will have under various conditions.

1. Reduces cooling load

If the air outside is cooler than the air inside the building during the cooling season (such as early morning or at night), “By-pass” ventilation will draw in the cooler outside air and reduce the cooling load on the system.

2. Cooling using outdoor air

During cooler seasons (such as between spring and summer or between summer and fall), if the people in a room cause the temperature of the room to rise, “By-pass” ventilation draw in the cool outside air and use it as is to cool the room.

3. Night purge

“By-pass” ventilation can be used to release hot air from inside the building that has accumulated in buildings a business district during the hot summer season.

4. Office equipment room cooling

During cold season, outdoor air can be drawn in and used as is to cool rooms where the temperature has risen due to the use of office equipment.
(Only when interlocked with City Multi and Mr. Slim indoor unit)

9.2 Switching between Heat Recovery and By-pass in the Automatic Ventilation Mode

Control of the automatic ventilation mode is performed according to the table below and automatic algorithm temperature maps. Note that operation is fixed at heat recovery when the fan is stopped or when there is an abnormality with the thermistor.

Conditions		Temperature Map
When in automatic ventilation mode when not interlocked with City Multi or Mr. Slim indoor unit. (Including when interlocked by external control input.)		According to (a).
When the outside temperature has been 28°C or higher in the last 24 hours.		According to (b).
Interlocked with City Multi indoor unit	Fan mode operation for all interlocked indoor units.	Fixed to Lossnay ventilation.
	Heating mode for one or more interlocked indoor units.	According to (c).
	When indoor units are stopped and only Lossnay unit is operated.	Fixed to Lossnay ventilation.
	Conditions other than the above.	According to (d).
Interlocked with Mr. Slim indoor unit	Mr. Slim in fan mode.	Fixed to Lossnay ventilation.
	Mr. Slim in heating mode.	According to (c).
	Mr. Slim in ventilation mode.	According to (a) or (d).
	Conditions other than the above.	According to (d).

Note:

- There is a maximum delay of 30 seconds during damper switching.
- Even if “By-pass” is selected by the Lossnay remote controller, Lossnay ventilation will be performed if the outdoor temperature is 8°C or less. This is to prevent condensation.
- When multiple City Multi indoor units are connected in a group, the average set temperature for each indoor unit will be the target temperature. The set temperature is the target temperature for the Mr. Slim indoor unit.
- In the case of (c) when the indoor unit is stopped in winter, cooling with outdoor air is performed because equipment in the room may cause a rise in indoor temperature.

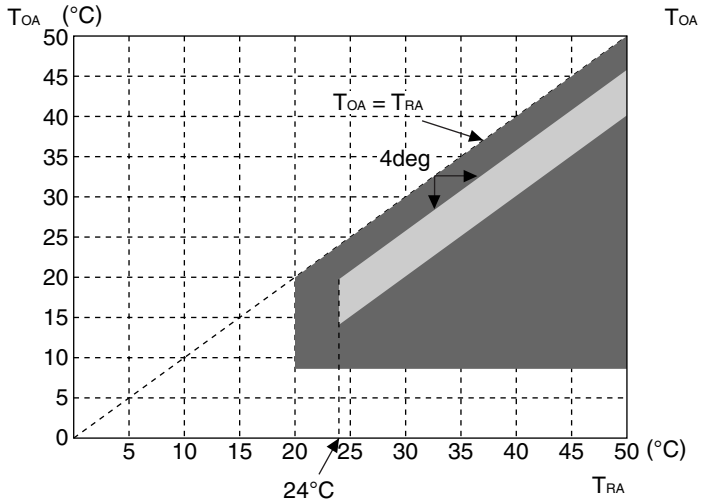

(a) When there is no target temperature

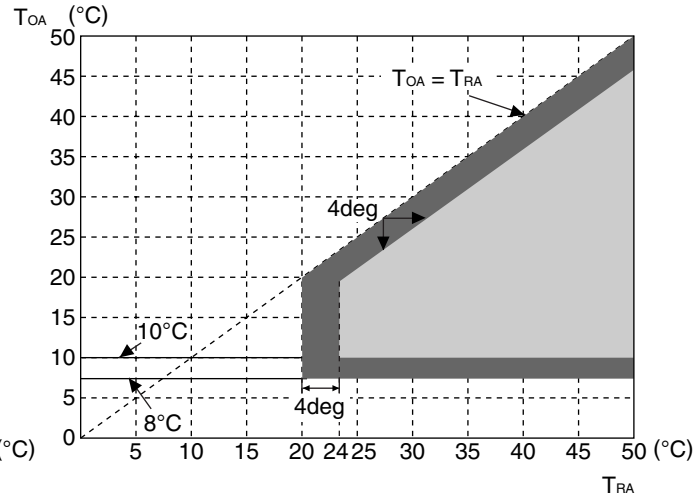

(b) When there is no target temperature and the outside temperature has been 28°C or higher in the last 24 hours.

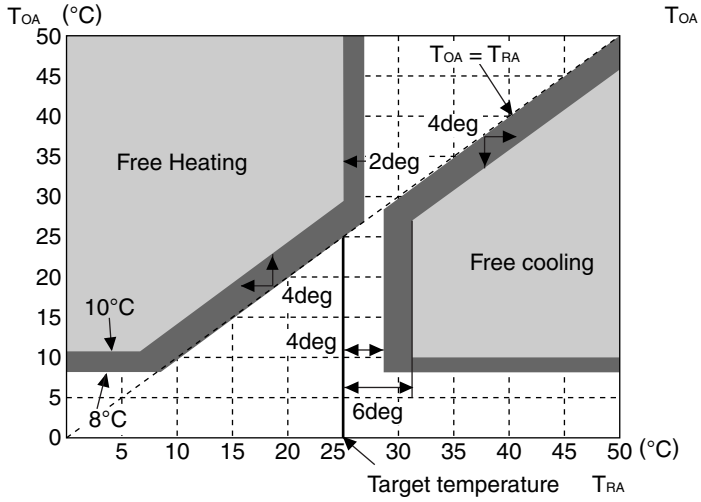

(c) When there is a target temperature (Heating)

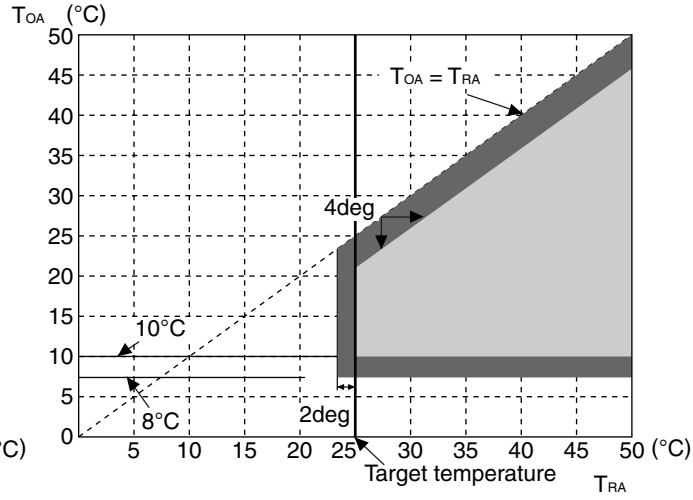

(d) When there is a target temperature (Cooling)
Or the outside temperature has been 28°C or higher in the last 24 hours when interlocked with Mr.Slim and Mr.Slim in ventilation mode.

Lossnay ventilation

By-pass ventilation

Comfortzone (Maintains the condition held prior to entering the range.)

T_{OA}: Outdoor air temperature

T_{RA}: Indoor air temperature

The indoor air and outdoor air temperature are detected by the two temperature sensors (thermistors) built into the main Lossnay unit.

10. Cautions of Lossnay Operation in cold region

10.1 Use of Pre-Heating Unit

If Lossnay unit operates in the condition below OA should be heated by pre heating unit to prevent condensation and freezing in Lossnay unit and core.

(1) OA temperature is less than -10 degree C.

(2) EA is plotted over the saturation curve like point C in the following fig, OA, EA, SA and RA conditions are plotted in the coldest condition in the year.

Condensation and freezing may occur within the Lossnay unit and core under the conditions of (1) and (2).

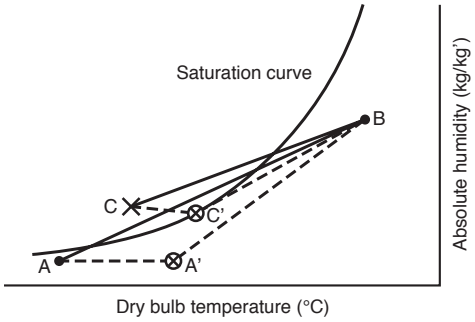

OA heating is not necessary except for conditions listed above.

Intermittent operation

If OA temperature goes down to -10 degree C or below during operation of the Lossnay without Pre heating unit, supply air fan will be in intermittent operation mode to protect core against freezing.

Intermittent operation ; After measuring -10 degree C or below, the Lossnay unit will run for 60 minutes, then it stop SA fan for 10 minutes.(In the case that OA goes down to -15 degree C, or outside air stays at -10 degree C or colder for a long time (i.e day or more) pre heater unit should be fitted to prevent condensation and freezing.)

10.2 Wiring Preheater with Lossnay

RX4 type can control preheater with OA temperature. Wiring is following fig.

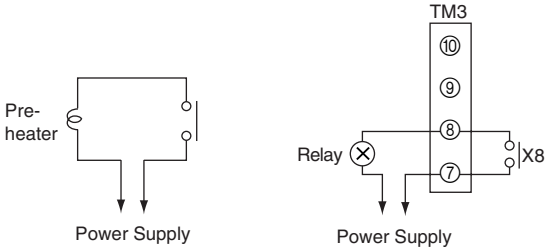

SW5-6 in Lossnay PCB should turn ON to control preheater by Lossnay. (Refer to page 71)

	OFF ON	Operation
SW5	6	Malfunction monlter (factory setting)
	6	Pre-heat control output

10.3 Algorithm of Preheater Control by Lossnay PCB

This is the example of algorithm of preheater control by RX4.

Example of control

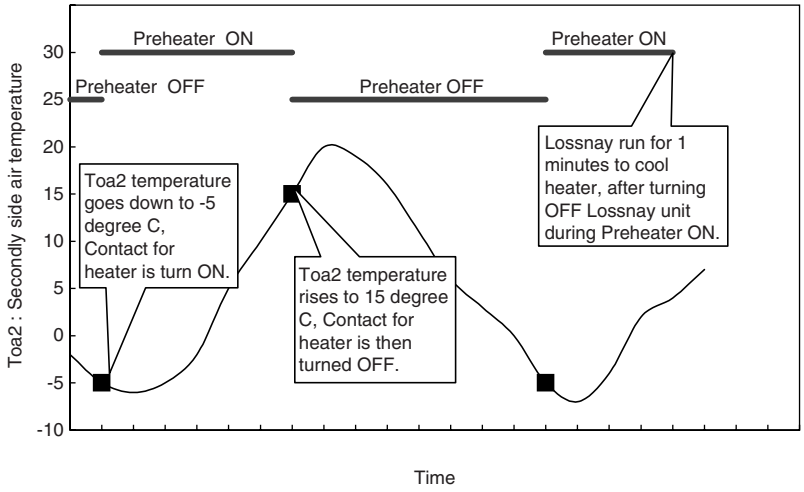

The control method

(1) Heater ON
The X8 relay turns on, when the OA temperature gets to -5°C or less.
The OA temperature is checked after 10 second from the SA fan is started.

(2) Heater OFF
The X8 relay turns off, when the OA temperature gets over 15°C,
or when the SA fan stops.
or in case of the OA temperature sensor error.

(3) Remaining-heat exclusion
After being turned off the heater, the SA and EA fans are made to operate for at least 1 minute with the notch as they are.
When the heater is being ON at the time of a stop, while turning off the heater instancy, the fans delay operation for 1 minute.

(4) Pre-heat malfunctions
After turning ON the Pre-heat output (X8), when the OA temperature becomes larger than 15°C within 15 minutes, or when the intermittent operation shown in 10.1 starts.
The Pre-heat output (X8) turns OFF, and the re-drive of the heater is not performed until Lossnay is stopped.
The error message “3126” is displayed at the M-NET remote controller, but not for PZ-41SLB-E Lossnay remote controller.

10.4 Example of Heater Capacity

Requiring of heating capacity could be shown following formula with Toa1,primary side temp, and Toa2,secoundly side temp.

$W1 = Sf \times Q \times \gamma \times C \times (Toa2-Toa1) \div 860$

$W1 = Q \times 1.2 \times 0.24 \times (Toa2-Toa1) \div 860$ [kW] ..... ①

Q [CMH] : Air volume

γ [kg/m^3] : Specific gravity of air, 1.2

C [kcal/kg] : specific heat of air, 0.24

Toa1 [°C] : Primary temp.

Toa2 [°C] : Secondly temp.

Sf : Safety ratio, 1.0 ..... Safety ratio is 1.0 to prevent selecting too big capacity.

This is the example of LGH-100RX4-E using in following condition.

Coldest condition : -20°C 40% RH, Indoor condition 23°C 50% RH

Firstly, calculate capacity with Low notch air volume.

If capacity is calculated with air volume of high speed, secondly temperature might rise too high over 20 degree C during low notch operation. Then, secondly temp. repeat going down to -5 degree C and going up to 15 degree C
In this case, contact may be broken by repeating ON and OFF.

Low notch air volume of LGH-100RX4-E is 870 CMH

Temp. exchange efficiency [ηt] : 81%

Enthalpy. exchange efficiency [ηh] : 74%

EA temp. : $Tea = Tra + (Toa - Tra) \times \eta t = 23 + (-20 - 23) \times 0.81 = -11.8$°C

EA Enthalpy : $Hea = Hra + (Hoa - Hra) \times \eta h = 45.4 + (-19.4 - 45.4) \times 0.74 = -2.6$kJ/kg

EA absolute humidity : 3.7g/kg', read from psychometric chart

EA condition, Point C, is left side of saturation curve as fig 1.

OA should be heated by heater to prevent condensation of Lossnay.

fig 1

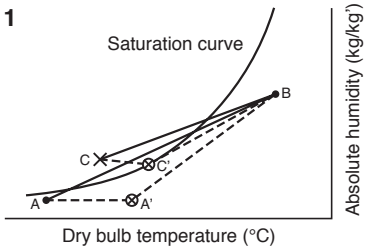

Requiring of heating capacity could be shown following formula ①.

$W1=Q \times 1.2 \times 0.24 \times (Toa2 - Toa1) \div 860$ [kW]
Tentatively substitute 5.4 kW to heater capacity,W1.

Q : 870 [CMH]
Toa1 : -20 [°C]

$(Toa2 - (-20)) = 5.4 \div 870 \div 1.2 \div 0.24 \times 860$
$Toa2 = 18.5 - 20 = -1.5$°C

EA absolute humidity is 3.7g/kg'. Secondly side absolute humidity is same as primary side.

During pre-heater of 5.4kW, calculate EA temp.,Tea' as following.
$Tea' = Tra + (Toa - Tra) \times \eta t = 23 + (-1.5 - 23) \times 0.81 = 3.2$°C
In this case, condensation does not occur in EA as Point C' in fig1.

SA condition is 18.4°C, 47%RH

Following table is calculating result of Toa1,Toa2 and SA of each notch.

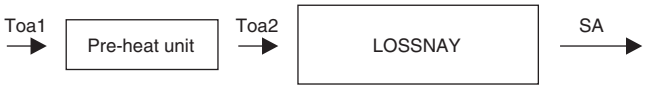

Finally, confirm the EA condition in high notch.
In this case, EA relative humidity is less than 100% in high notch.

Lossnay can be use effectively with 5.4kW heater under the condition of -20 degree C OA temperature.

If Toa2 is less than -10 degree C in high notch under this calculation, should run in low notch in winter season.

Following table is result of calculation with rating air volume of each Lossnay unit.

Use real value of air volume for the calculation.

Table to show approximate size of heater (kW) (Low notch)

Model			LGH-15RX4	LGH-25RX4	LGH-35RX4	LGH-50RX4	LGH-65RX4	LGH-80RX4	LGH-100RX4	LGH-150RX4	LGH-200RX4
Lo	Rating air volume CMH		110	165	230	350	500	670	870	1250	1650
	Toa2 - Toa1°C	5	0.18	0.28	0.39	0.59	0.84	1.12	1.46	2.09	2.76
		10	0.37	0.55	0.77	1.17	1.67	2.24	2.91	4.19	5.53
		15	0.55	0.83	1.16	1.76	2.51	3.37	4.37	6.28	8.29
		20	0.74	1.11	1.54	2.34	3.35	4.49	5.83	8.37	11.05

Toa2-Toa1 should be less than 20 degree C, because contact for pre-heater repeat ON and OFF by PCB.

Refer to 10.3.

Heater capacity should be less than following value.

Model	LGH-15RX4	LGH-25RX4	LGH-35RX4	LGH-50RX4	LGH-65RX4	LGH-80RX4	LGH-100RX4	LGH-150RX4	LGH-200RX4
Heater capacity [kW]	0.7	1.1	1.5	2.3	3.3	4.5	5.8	8.4	11.1

Calculate the temperature rising during high notch operation with above figure of capacity.

W1 = Q* 1.2* 0.24* (Toa2 - Toa1) / 860 [kW]
(Toa2 - Toa1) = W1* 860 / Q / 1.2 / 0.24

Table to show approximate size of heater (kW)(High notch)

Model	LGH-15RX4	LGH-25RX4	LGH-35RX4	LGH-50RX4	LGH-65RX4	LGH-80RX4	LGH-100RX4	LGH-150RX4	LGH-200RX4
Heater capacity [kW]	0.74	1.11	1.54	2.34	3.35	4.49	5.83	8.37	11.05
Rating air volume CMH	150	250	350	500	650	800	1000	1500	2000
Toa2 - Toa1°C	14.7	13.2	13.1	14.0	15.4	16.8	17.4	16.7	16.5

10.5 Caution for Selecting Pre-heating Unit

Calculate the capacity under following items.

1 Actual air volume is calculated by taking into account ductwork pressure loss. Select the capacity of heater considering caluculate air volume.

Calculating air volume should be Low notch air volume, referring to 2-2.
Deference between secondly and primary temperature should be less than 20 degree C.
If capacity is calculated with air volume of high speed, secondly temperature might rise too high over 20 degree C during low notch operation. Then, secondly temp. repeat going down to -5 degree C and going up to 15 degree C .In this case, contact may be broken by repetitive switching ON and OFF of the heater contactor.

2 Select the capacity of heater to ensure Toa2 is always above -10 degree C.

If Lossnay OA thermistor measure less than -10 degreeC at 60 minutes after operating, intermittence operation of SA fan stop operation for 10 minutes and normal operation for 60 minutes. In this case, pre-heater is stopped by Lossnay PCB.

3 Considering heater safety

- Always Ensure that local regulations are adhered to for installation of pre-heater.
- Pre-heater should be separated from Lossnay as possible to prevent fire spread.

note; secondly temperature = Toa2

There are useful software,Lossnay economical calculation soft, for selecting heater capacity.

11. Troubleshooting

11.1 Service Flow

Confirmation items
① Condition of trouble – remote controller display, etc.
② Frequency of trouble – date of start of operation and occurrence
③ Occurrence timing
④ Existence of drawings, equipment (including controllers and equipment sold separately), cables, wiring, and settings.

Applicable models
Lossnay
LGH-15 to 200RX4-E

Remote controller
PZ-41SLB-E
PZ-52SF-E

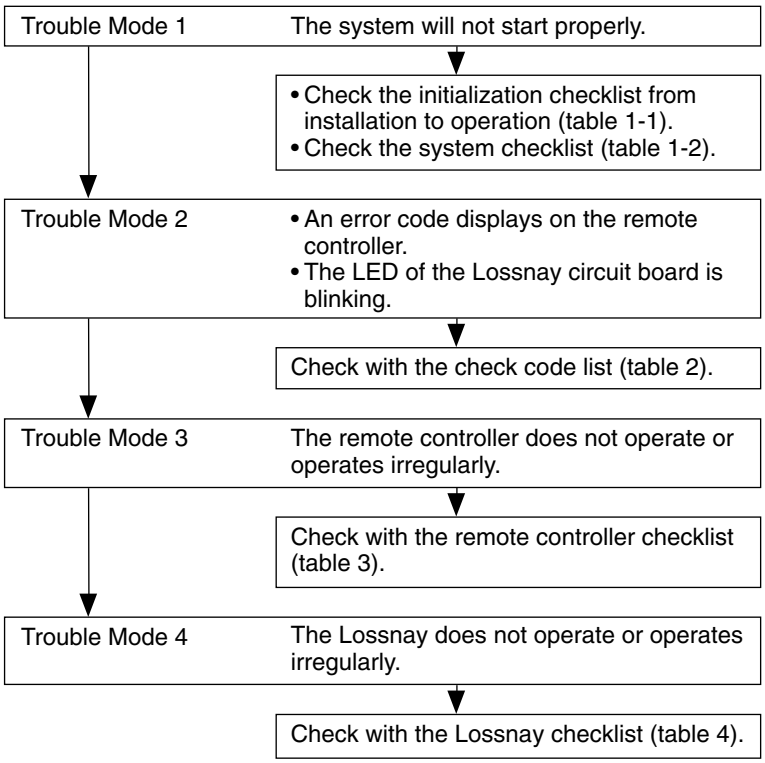

Precautions when diagnosing malfunctions
- When removing a transistor or printed circuit board, make sure the breaker is thrown.
- When removing the circuit board, always hold it at both ends and remove carefully so as not to apply force to the surface mounted parts.
- When removing the circuit board, be careful of the metal edges on the board.
- When removing or inserting the connectors for the circuit board, hold the entire housing section. Never pull on the lead wires.
- When servicing, be sure to recreate the malfunction 2 to 3 times before starting repairs.
- If a malfunction of the printed circuit board is suspected, check for disconnected wires in the print pattern, burnt parts or discoloration.
- If the printed circuit board is replaced, make sure that the switch settings on the new board are the same as the old board.

11.1.1 Error List

Classification	Error item	Measures taken by Lossnay	Remote controller display error code	LED 1 (green) Display (No. of blinks)	LED 2 (red) Display (No. of blinks)	Error monitor output *4)	Cancellation measures			
							Reset power supply	Change address	Stop ↓ Start	Error delete
Unit error	Fan motor operation device error	• Cancellation	4000/4116 *1)	2 times	—	○	○	○	—	○
	Damper motor error	• Cancel damper operation • Other controls as normal	3602 *2)	3 times	—	○	○	○	○	—
	OA temperature sensor error	• Lossnay ventilation fixed (for “Auto” modes) • Other controls as normal	5101	4 times	—	○	○	○	—	○
	RA temperature sensor error	• Lossnay ventilation fixed (for “Auto” modes) • Other controls as normal	5102	5 times	—	○	○	○	—	○
	Pre-heat error	• The Pre-heat output (X8) turns OFF.	3126	8 times	—	–	○	○	○	○
	Test operation	• Fan: High speed • Lossnay ventilation fixed	0900	—	—	—	–	–	–	–
Communication error	Dual address	—	6600	—	6 times	○	○	○	○	—
	No ACK	—	6607	—	—	—	○	○	—	○
	No response	—	6608	—	—	—	○	○	—	○
	Controller communication error	• Cancellation	6607/6608	—	8 times	○	○	○	—	○
	Communication circuit error	—	6602/6603/ 6604	—	1 - 5 times	○	○	○	—	○
	Local transmission cable communication error	• Restricted to ON/OFF.	6801 *3)	9 times	—	○	○	○	○	○
	Polarity not set	—	—	—	LED 6 turn off	—	○	○	—	○
	PZ-41SLB-E communication error	• Cancellation	6608	9 times	—	○	○	—	—	○

*1) “4000” is displayed on PZ-41SLB-E only.
*2) This error is not generated in the LGH-150RX4, LGH-200RX4 model.
*3) “6801” is displayed on the M-NET controllers only.
*4) Since the error monitor output will turn into the preheat output if SW5-6 is turned ON, it becomes impossible to use it.

11.2 Items to Check

Trouble Mode 1: The system will not start properly.

Initialization checklist from installation to operation (Table 1-1)

After checking the system, check the points below up to operation.

No.	Checkpoint
1	Do the capacity of the main power supply on/off unit and wiring span meet specification?
2	Is the specified power supplied to the Lossnay power terminal (TM1)? (refer to page 63)
3	Is the wiring length of the transmission cable within specifications? When using PZ-41SLB-E: Overall extension within 500 m When using M-NET: Maximum power supply length within 200 m, maximum distance between ends within 500 m (refer to page 34)
4	Does the transmission cable meet regulations? (Type, diameter) (refer to page 65)
5	Is the transmission cable wired at least 5 cm away from the power supply cable?
6	Are multiple transmission or signal cables wired to the same power cable duct?
7	Are multiple transmission cables wired with multi core cables?
8	Is the transmission cable connected to the terminal unit? (PZ-41SLB-E to TM4 ①, ②; M-NET to TB5 Ⓐ, Ⓑ)
9	Is the transmission cable securely connected to the Lossnay terminal unit? (refer to page 65, 67)
10	When not using M-NET If using 1 Lossnay unit, is the Main/Sub change switch (SW1) on the Lossnay circuit board set to “Main”? If using 2 or more Lossnay units, is the Main/Sub switch set to “Main” on only one unit, and the other units are set to “Sub”? (refer to page 66)
11	When using M-NET Is the address switch on the Lossnay circuit board (SA1, SA2) set to the correct number? (refer to page 69)
12	When using external control input Do the specifications of the external signal match specifications of signals that can be input to the Lossnay? (refer to page 65)
13	When the external input signal is a pulse signal Is the pulse input switch (SW2-2) on the Lossnay circuit board set to ON? (refer to page 66)
14	When the external signal is 12V DC, 24V DC, or Mr. Slim (A-control or K-control) signal Is it connected to ①, ② on the Lossnay external control input terminal unit (TM2)?
15	When the external signal is an uncharged a-contact signal Is it connected to ①, ③ on the Lossnay external control input terminal unit (TM2)?
16	When M-NET is not being used Is the external input signal connected to the Lossnay set to “Main”?
17	Is the signal cable length within wiring specifications? 12V DC, 24V DC signal: Within limitation of the external device Uncharged a-contact signal: Within 500 m Mr. Slim (A-control or K-control) signal: Within 500 m
18	Is the signal cable wired at least 5 cm away from the power supply cable?
19	Is the output capacity of the Lossnay operation monitor/malfunction monitor (pre-heat output) within specifications? Operation monitor output: Maximum 240V AC/24V DC 2A, minimum 220V AC/5V DC 100 mA Malfunction monitor output/Pre-heat output: Maximum 240V AC/24V DC 2A, minimum 220V AC/5V DC 100 mA
20	Are the power supply cable, transmission cable, signal cable, etc., securely connected to the proper terminals?
21	Are the settings for the Main/Sub switch, address switch, and function select switch correct?

No.	Checkpoint
22	When Pre-heat output is used, turn the SW5-6 ON. There is no method of turning ON the Pre-heat output without changing OA temperature. The first check of the installation ① Make the power supply of the heater turned off. ② Short-circuit the Pre-heater output with a lead etc.. ③ Check whether the relay contact by the side of the heater turns on. The Preheat output is never closed even if abnormalities, such as drawing out the OA/RA thermistor connector, occur.

System checklist

(1) Use this checklist when using a PZ-41SLB-E or an external device (Table 1-2-1)

No.	Symptom	Cause	Corrective action
1	Remote controller display does not appear.	◯ Power is not supplied to the Lossnay, or power outside specifications is connected. ◯ When using only 1 Lossnay, the Main/Sub switch (SW1) on the Lossnay circuit board is set to “Sub.” ◯ The overall wiring length of the transmission cable is longer than specifications (longer than 500 m). ◯ The remote controller is connected to TB5 (M-NET transmission cable). ◯ PZ-52SF-E is connected to the Lossnay local remote controller.	◯ Check the power supply to the Lossnay. ◯ Set the Main/Sub (SW1) switch to “Main.” (refer to page 66) ◯ Check the length of the transmission cable wiring. ◯ Connect the transmission cable to TM4 ①, ②. (refer to page 65) ◯ Change to the PZ-41SLB-E remote controller.
2	Remote controller does not operate. (Communication error display)	◯ When using multiple Lossnay units, the Main/Sub switch (SW1) on the Lossnay circuit board of the second or following unit is set to “Main.” ◯ The overall wiring length of the transmission cable is longer than specifications (longer than 500 m). ◯ Multiple transmission cables are wired with multi core cables.	◯ Set the Main/Sub switch (SW1) of the second and following Lossnay units to “Sub.” (refer to page 66) ◯ Check the length of the transmission cable wiring. ◯ For the applied transmission cable, wire the transmission cables away from the other transmission cable.
3	Interlocked operation with external device does not occur.	◯ The type of external signal does not match the connected terminal unit (charged, uncharged, Mr. Slim signal). ◯ The type of external signal does not match the pulse input switch (SW2-2) setting (level signal, pulse signal). ◯ The external device signal is not being input. ◯ The external device and signal cable wiring is longer than specifications. (12V DC, 24V DC: Longer than limitations of external device Uncharged a-contact: Longer than 500 m Mr. Slim signal: Longer than 500 m) ◯ The Delayed Start mode is set at the remote controller (PZ-41SLB-E). ◯ The ON Interlocked Operation mode or OFF Interlocked Operation mode is set at the remote controller (PZ-41SLB-E). ◯ When using multiple Lossnay units, the external control input signal is connected to a unit with the “Sub” setting made.	◯ Check the connection to the external control input terminal (TM2) for the type of external signal. (refer to page 65, 66) ◯ Check the type of external signal and the setting of the pulse input switch (SW2-2). (refer to page 66) ◯ Check the external device. ◯ Check the length of the signal cable wiring. ◯ Check the Delayed Start mode setting at the remote controller (PZ-41SLB-E). (refer to page 75) ◯ Check the Interlocked Operation mode setting at the remote controller (PZ-41SLB-E). (refer to page 75) ◯ Connect the external control input signal to the Lossnay unit set to “Main.”
4	Pre-heat control doesn’t work.	◯ SW5-6 is OFF. ◯ OA temperature is larger than -5°C.	◯ Turn the SW5-6 ON. ◯ Operate only below -5°C.

(2) System checklist when using the M-NET (Table 1-2-2)

No.	Symptom	Cause	Corrective action
1	Does not interlock with City Multi. (The Lossnay cannot be operated by the ventilation switch on the ME remote controller, MA remote controller, or MELANS.)	◯ The Lossnay is not set for interlocked operation, or is set for interlocked operation at the wrong address. ◯ The length of the M-NET transmission cable wiring from the outdoor unit or the system's overall wiring length is longer than specifications. (Longer than 200 m from the outdoor unit, longer than 500 m between ends.) ◯ PZ-41LSB-E is connected to the Lossnay local remote controller.	◯ Check the Lossnay address, and set for an address corresponding to interlocked operation. (refer to "15. Appendix") ◯ Check the length of the transmission cable wiring. ◯ Change to the PZ-52SF-E remote controller (PZ-41SLB-E can not be used with the M-NET).
2	Cannot operate using the MELANS or Lossnay remote controller.	◯ The address that has been set for the group in MELANS and the address for the Lossnay are different. ◯ The length of the M-NET transmission cable wiring from the power supply unit or the system's overall wiring length is longer than specifications. (Longer than 200 m from the power supply unit, longer than 500 m between ends.) ◯ PZ-41LSB-E is connected to the Lossnay local remote controller.	◯ Check the registered address in MELANS. (refer to "15. Appendix") ◯ Check the length of the transmission cable wiring. ◯ Change to the PZ-52SF-E remote controller (PZ-41SLB-E can not be used with a M-NET system).
3	A unit should operate independently by MELANS or the Lossnay remote controller, but it interlocks with another City Multi unit.	◯ It has been set for interlocked operation with the City Multi unit.	◯ Cancel the interlocked operation setting. (refer to "15. Appendix")
4	Cannot perform group settings for the Lossnay using MELANS, ME remote controller, or MA remote controller. (The remote controller shows "88" at the time of registration.)	◯ Power is not supplied to the Lossnay, or power outside specifications is connected. ◯ The M-NET transmission cable is connected to TM4 ①, ②. ◯ The transmission cable is not properly connected to the MELANS or the City Multi. ◯ The length of the transmission cable wiring is longer than specifications (longer than maximum 200 m from the power supply unit, longer than 500 m between ends.)	◯ Check the power for the Lossnay and perform the registration again. (refer to "15. Appendix") ◯ Connect the transmission cable to TB5 Ⓐ, Ⓑ. (refer to page 68) ◯ Check the transmission cable connection. (refer to page 68) ◯ Check the length of the transmission cable wiring.
5	When power is supplied to the system, the Lossnay remote controller continues to display "HO" and does not start. (Group registration information disappears.)	◯ The Group setting was made on a Lossnay remote controller in a system connected to a system controller. ◯ The length of the transmission cable wiring is longer than specifications (longer than maximum 200 m from the power supply unit, longer than 500 m between ends.)	◯ In a system connected to MELANS, make the group setting with the MELANS (Do not make the group setting with the Lossnay remote controller). (refer to "15. Appendix" or page 82) ◯ Check the length of the transmission cable wiring.
6	When power is supplied to the system, the remote control display goes blank and the system does not start.	◯ Over the number of units that can be controlled with the Lossnay remote controller. ◯ The length of the transmission cable wiring is longer than specifications (longer than maximum 200 m from the power supply unit, longer than 500 m between ends.)	◯ Check remote control unit number limitations when using a power supply unit (refer to page 29). ◯ Check the length of the transmission cable wiring.

No.	Symptom	Cause	Corrective action
7	The power display " ◉ " does not display when power is supplied to the system.	① When using City Multi and Lossnay interlocked system (connected to the indoor unit system) ◯ The transmission cable is not correctly connected to the Lossnay remote controller. ◯ The power is not turned on for the outdoor unit. ◯ The length of wiring for the outdoor unit's M-NET transmission cable is longer than specification (longer than 200 m).	◯ Check the transmission cable connection. (refer to page 81) ◯ Check the power to the outdoor unit. ◯ Check the length of the transmission cable wiring.
		② When using a Lossnay individual system or City Multi and Lossnay interlocked system connected to the central system. ◯ The power supply unit is not connected to the transmission cable. ◯ The power to the power supply unit is not turned on. ◯ The length of wiring of the M-NET transmission cable from the power supply unit is longer than specification (longer than 200 m).	◯ Connect to the power supply unit. (refer to page 68) ◯ Check the power to the power supply unit. ◯ Check the length of the transmission cable wiring.
8	The "HO" on the remote controller continues to flash when the power is supplied to the system.	◯ Lossnay is Not supplied with specified power. ◯ The address for the Lossnay remote controller does not have a group setting at the MELANS. ◯ The M-NET transmission cable is connected to TM4 ①, ②. ◯ For a Lossnay individual system with no MELANS, Lossnay registration has not been performed by the Lossnay remote controller.	◯ Check the power to the Lossnay. ◯ Check the Lossnay remote controller address registration with the MELANS ("HO displays for 3 – 10 minute when electricity is supplied to the system). (refer to "15. Appendix") ◯ Connect the transmission cable to TB5 Ⓐ, Ⓑ. (refer to page 68) ◯ Check the Lossnay registration with the Lossnay remote controller. (refer to "15. Appendix")
9	"LC 6608" displays on the remote controller and the Lossnay does not operate.	◯ The remote controller is PZ-41LSB-E and connected to the TB5 Ⓐ, Ⓑ.	◯ Change to the PZ-52SF-E remote controller (PZ-41SLB-E can not be used with a M-NET system).
10	The operation specified by the system controller differs from the operation of the Lossnay.	◯ The remote controller is PZ-41SLB-E and connected to the TM4 ①, ②.	◯ Change to the PZ-52SF-E remote controller (PZ-41SLB-E can not be used with a M-NET system).

Trouble Mode 2

● An error code displays on the remote controller.

● The LED of the Lossnay circuit board is blinking.

An error code displayed on the remote controller (PZ-41SLB-E, PZ-52SF-E) or the M-NET controller and blinking or illumination of LED1 (green) or LED2 (red) on the circuit board shows the type of error. The LED blink interval is 0.25 seconds for both on and off. The display duration is approximately 5 seconds.

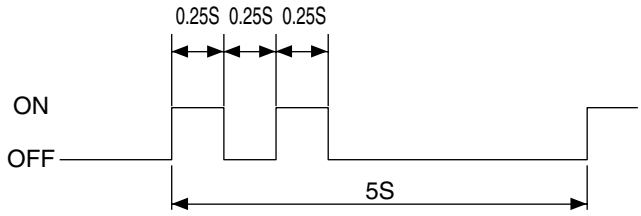

Error display example: Fan motor operation device error

(1) Checklist of error codes displayed on the PZ-41SLB-E and LED displays (Table 2-1)

Error code *1)	LED1 (green)	LED 2 (red)	Symptom	Cause	Corrective action
LC 6608	—	—	Lossnay communication error	◯ When using multiple Lossnay units, the main/sub setting has not been made for the second unit and following units. ◯ Multiple transmission cables have been wired using multi core wires. ◯ Transmission cable and power cable are too close. ◯ Transmission cable is not securely connected. ◯ The length of wiring of the transmission cable is longer than specification (longer than 500 m).	◯ Turn off the main power supply and set the Main/Sub switch (SW1) (first unit to main, second and following units to sub). (refer to page 66) ◯ Wire the transmission cable away from the other transmission cable. ◯ Wire the transmission cable at least 5 cm away from the power supply cable. ◯ Check the transmission cable connection. (refer to page 65) ◯ Check the length of the transmission cable wiring.
RC6608 SRC 6608	—	—	Communication error between remote controllers (when 2 remote controllers are connected)	◯ Multiple transmission cables have been wired using multi core wires. ◯ Transmission cable and power supply cable are too close. ◯ Transmission cable is not securely connected. ◯ The length of wiring of the transmission cable is longer than specification (longer than 500 m).	◯ Wire the transmission cable away from the other transmission cable. ◯ Wire the transmission cable at least 5 cm away from the power supply cable. ◯ Check the transmission cable connection. (refer to page 78) ◯ Check the length of the transmission cable wiring.
LC 0900 SLC 0900	—	—	Lossnay trial operation	◯ Trial operation switch on the Lossnay circuit board (SW2-1) is set to ON board.	◯ Check the test operation switch. (refer to page 72)
LC 4000 SLC 4000	2 blinks	—	Fan motor operation device error	◯ Lossnay fan will not stop.	◯ Replace the table.
LC 3602 SLC 3602	3 blinks	—	Damper related error	◯ Damper board operation is not correct. ◯ Connectors for the damper unit are not correctly connected.	◯ Remove the load and check or move the damper board by hand. ◯ Check the connection of the lead wire's connectors and the circuit connector.
LC 5101 SLC 5101	4 blinks	—	OA thermistor related error	◯ Connectors for the thermistor are not correctly connected.	◯ Check the connection of the lead wires connectors and the circuit connector.
LC 5102 SLC 5102	5 blinks	—	RA thermistor related error	◯ Connectors for the thermistor are not correctly connected.	◯ Check the connection of the lead wires connectors and the circuit connector.
——— *2)	8 blinks	—	Pre-heat error	◯ In order that the OA temperature might not rise up, intermittent operation started. ◯ After turning ON the Pre-heat output (X8), when the OA temperature becomes larger than 15°C within 15 minutes. ◯ SW5-6 ON without preheating installation.	◯ Check whether the heater power is supplied. Check whether the wiring is correct. If not above-mentioned, the heater capacity is too small. The heater capacity needs to be looked again. ◯ Since the heater capacity is too large, the OA temperature rises up too much. The heater capacity needs to be looked again. ◯ Turn SW5-6 OFF, when no preheating installation.

Error code *1)	LED1 (green)	LED 2 (red)	Symptom	Cause	Corrective action
———	9 blinks	—	Remote controller communi-cation error	◯ Multiple transmission cables have been wired using multi core wires. ◯ Transmission cable and power sup-ply cable are too close. ◯ Transmission cable is not securely connected. ◯ The length of wiring of the transmis-sion cable is longer than specifica-tion (longer than 500 m).	◯ Wire the transmission cable away from the other transmission cable. ◯ Wire the transmission cable at least 5 cm away from the power supply cable. ◯ Check the transmission cable con-nection. (refer to page 65, 66) ◯ Check the length of the transmis-sion cable wiring.
“Filter” blink-ing	—	—	Warning to clean air filter by comulative operation time	◯ Interval for cleaning Lossnay air fil-ter has elapsed.	◯ After cleaning the air filter press the “Filter” button on the remote con-troller 2 times.
“HO” blinking	blink-ing	—	System is starting	◯ LED1 blinks at 1 second intervals during starting operation (maximum of 45 seconds.)	◯ There is no error.

*1 LC: Lossnay set to Main SLC: Lossnay set to Sub RC, SRC: remote controller (PZ-41SLB-E).
*2 The error message is NOT displayed for the PZ-41SLB-E Lossnay remote controller.

(2) Checklist of error codes displayed on the PZ-52SF-E, M-NET controllers, and LED displays (Table 2-2)

Error code *1)	LED1 (green)	LED 2 (red)	Symptom	Cause	Corrective action
6600	—	6 blinks	Multiple address error	◯ There is another unit with the same address setting.	◯ Check the addresses of devices in the system.
6607 6608	—	8 blinks	No ACK error No answer error (M-NET communication error)	◯ Power supply to Lossnay is not turned on. ◯ Lossnay address was changed. ◯ Multiple transmission cables have been wired using multi core wires. ◯ Transmission cable is not securely connected. ◯ The length of wiring of the transmission cable is longer than specifications (longer than maximum 200 m from the power supply unit, longer than 500 m between ends).	◯ Check the power to the Lossnay. ◯ Check the Lossnay address. ◯ Wire the transmission cable away from the other transmission cable. ◯ Check the transmission cable connection. (refer to page 68) ◯ Check the length of the transmission cable wiring.
0900	—	—	Lossnay trial operation	◯ Trial operation switch on the Lossnay circuit board (SW2-1) is set to ON.	◯ Check the trial operation switch. (refer to page 72)
4116	2 blinks	—	Fan motor operation device error	◯ Lossnay fan will not stop.	◯ Replace the table.
3602	3 blinks	—	Damper related error	◯ Damper board operation is not correct. ◯ Connectors for the damper unit are not correctly connected.	◯ Remove the load and check or move the damper board by hand. ◯ Check the connection of the lead wires connectors and the circuit connector.
5101	4 blinks	—	OA thermistor related error	◯ Connectors for the thermistor are not correctly connected.	◯ Check the connection of the lead wires connectors and the circuit connector.
5102	5 blinks	—	RA thermistor related error	◯ Connectors for the thermistor are not correctly connected.	◯ Check the connection of the lead wires connectors and the circuit connector.
3126	8 blinks	—	Pre-heat error	◯ In order that the OA temperature might not rise up, intermittent operation started. ◯ After turning ON the Pre-heat output (X8), when the OA temperature becomes larger than 15°C within 15 minutes. ◯ SW5-6 ON without preheating installation.	◯ Check whether the heater power is supplied. Check whether the wiring is correct. If not above-mentioned, the heater capacity is too small. The heater capacity needs to be looked again. ◯ Since the heater capacity is too large, the OA temperature rises up too much. The heater capacity needs to be looked again. ◯ Turn SW5-6 OFF, when no preheating installation.
6602 6603 6604	—	1 - 5 blinks	Communication circuit section error	◯ Error with transmission cable. ◯ Controller where error originally occurred is defective. ◯ Lossnay board is defective.	◯ Check transmission cable relations. ◯ Check the controller where the error occurred. ◯ Replace the circuit board.
———	—	Lit	No M-NET connection information	◯ Lossnay does not have Group setting (registration) made.	◯ Check the Lossnay address and confirm that the group setting is made. (refer to page 82 or “15. Appendix”)
Filter blinking	—	—	Warning to clean air filter by comulative operation time	◯ Interval for cleaning Lossnay air filter has elapsed.	◯ After cleaning the air filter press the “Filter” button on the remote controller 2 times.

Error code *1)	LED1 (green)	LED 2 (red)	Symptom	Cause	Corrective action
———	Lit	—	In delayed start operation	◯ Delayed start operation is set at the function select switch (SW5-1) on the Lossnay circuit board.	◯ There is no error.
———	LED6 (red) off		No power to M-NET transmission cable	◯ Power supply is not supplied to the M-NET transmission cable. ◯ Wiring length of the transmission cable is from the power supply unit or the outdoor unit is longer than specification (maximum extension 200 m).	◯ Check the connection of the power supply unit, outdoor unit and transmission cable. ◯ Check the length of the transmission cable wiring.

*1 The letters “LC” that display with the error code show a Lossnay unit type, and the number in the third column shows the address.

Trouble Mode 3: The remote controller does not operate or operates irregularly.

(1) Checklist for when using the PZ-41SLB-E (Table 3-1)

No.	Symptom	Cause	Corrective action
1	Nothing displays on the LCD.	◯ Transmission cable is connected to the wrong terminal.	◯ Check the transmission cable connection (connected to TM4 on the Lossnay board). (refer to page 65)
		◯ No Lossnay is set to “Main.”	◯ Turn off the main power supply and set the Main/Sub switch (SW1) (first unit to main, second and following units to sub). (refer to page 66)
		◯ Power supply to the Lossnay is not turned on.	◯ Check the power supply to the Lossnay.
		◯ Lossnay is connected to a power supply with a rating outside specification.	◯ Check the power supply.
		◯ Transmission cable is not securely connected.	◯ Check the transmission cable connection. (refer to page 65)
		◯ The length of wiring of the transmission cable is longer than specification (longer than 500 m).	◯ Check the length of the transmission cable wiring.
2	Starts or stops, or the display changes, by itself.	◯ Multiple transmission cables have been wired using multi core wires.	◯ Wire the transmission cable away from the other transmission cable.
		◯ Transmission cable and power supply cable are too close.	◯ Wire the transmission cable at least 5 cm away from the power supply cable.
3	Displays a error code that is not in the check list.	◯ Letters on the remote controller LCD are dim.	◯ Replace the remote control.
		◯ The release of the Delay Start button or the Filter Reset button is not good.	◯ Replace the remote control.
4	Cannot stop the Lossnay with the remote controller (display shows “Interlocked”).	◯ External priority ON/OFF setting is made.	◯ Check the interlocked operation mode setting. (refer to page 75)
5	Cannot switch fan speed with the remote controller.	◯ High/Low change input (CN16) is ON.	◯ Check the High/Low change input (CN16). (refer to page 67)
		◯ The function select switch (SW2-4, 5) on the Lossnay circuit has the fixed high or fixed low speed set.	◯ Check the function select switch (SW2-4, 5) (refer to page 70)
6	Lossnay operates when the main power supply turns on and the remote controller displays.	◯ Main power supply was cut during Lossnay operation.	◯ Stop the Lossnay with the remote controller, then wait at least 10 second and turn off the main power supply .

(2) Checklist for when using PZ-52SF-E (Table 3-2)

No.	Symptom	Cause	Corrective action
1	Nothing displays on the LCD.	◯ Transmission cable is connected to the wrong terminal.	◯ Check the transmission cable connection (connected to Ⓐ, Ⓑ of terminal unit TB5 on the Lossnay board). (refer to page 68)
		◯ There is no power supply unit (for Lossnay only systems).	◯ Install the power supply unit.
		◯ The power supply unit is not turned on.	◯ Check the power to the power supply unit.
		◯ Transmission cable is not securely connected.	◯ Check the transmission cable connection. (refer to page 68)
		◯ Wiring length of the transmission cable is from the power supply unit or the outdoor unit is longer than specifications (maximum extension 200 m).	◯ Check the length of the transmission cable wiring.

No.	Symptom	Cause	Corrective action
2	Displays “HO” and does not start.	◯ It is less than 10 minutes since the power was supplied to the system.	◯ After supplying power to the system, HO blinks for a maximum of about 10 minutes. (This is not an error.)
		◯ Group setting (registration) has not been made.	◯ Make the group setting (registration). If using a system with a system controller, register at the system controller. If there is only the Lossnay remote controller, register at the remote controller. (refer to “15. Appendix” or page 82)
		◯ Remote control address has not been registered in the group setting by the system controller.	◯ Check the group setting at the MELANS. (refer to “15. Appendix”)
		◯ Power supply to the Lossnay is not turned on.	◯ Check the power supply to the Lossnay. (refer to page 63)
		◯ Lossnay is connected to a power supply with a rating outside specification.	◯ Check the power supply.
		◯ Lossnay transmission cable connection terminal is wrong.	◯ Check the transmission cable connection (connected to Ⓐ, Ⓑ of terminal unit TB5 on the Lossnay board). (refer to page 68)
		◯ Lossnay address was changed.	◯ Check the Lossnay address. (refer to page 69)
		◯ Lossnay board was changed.	◯ If the board has been replaced, reset the group settings. (refer to “15. Appendix”)
		◯ The length of wiring of the transmission cable is longer than specifications (longer than maximum 200 m from the power supply unit, longer than 500 m between ends).	◯ Check the length of the transmission cable wiring.
3	Cannot register the Lossnay from the remote controller or the controller.	◯ Power supply to the Lossnay is not turned on.	◯ Check the power supply to the Lossnay. (refer to page 63)
		◯ Lossnay is connected to a power supply with a rating outside specification.	◯ Check the power supply.
		◯ Transmission cable to the Lossnay is not connected.	◯ Check the transmission cable connection. (refer to page 68)
		◯ Lossnay transmission cable connection terminal is wrong.	◯ Check the transmission cable connection (connected to Ⓐ, Ⓑ of terminal unit TB5 on the Lossnay table). (refer to page 68)
		◯ Lossnay address is wrong.	◯ Check the Lossnay address. (refer to page 69)
		◯ The length of wiring of the transmission cable is longer than specifications (longer than maximum 200 m from the power supply unit, longer than 500 m between ends).	◯ Check the length of the transmission cable wiring.
4	Starts or stops, or the display changes, by itself.	◯ Set for interlocked operation with City Multi.	◯ Cancel interlocked operation setting. (refer to “15. Appendix”)
5	Displays a error code that is not in the checklist.	◯ Letters on the remote controller LCD are dim.	◯ Replace the remote controller.
6	Cannot stop the Lossnay with the remote controller (display shows “Central”).	◯ “Cancel Operation” setting is made from the MELANS.	◯ Check the settings of the MELANS.
		◯ External priority ON/OFF setting is made.	◯ Check the interlocked operation mode setting. (refer to page 72)
		◯ Remote/nearby switch input (CN32) is set to “Remote.”	◯ Check the remote/nearby change input (CN32).

Trouble Mode 4: The Lossnay does not operate or operates irregularly.

Lossnay checklist (Table 4).

No.	Symptom	Cause	Corrective action
1	The fan does not operate. The fan does not operate normally.	◯ Connectors for the fan connection or connectors for the control circuit section connection are not secure. ◯ Power supply is not supplied to the Lossnay, or power outside specifications is connected. ◯ Lossnay group setting is not made by using the M-NET. (LED2 lights)	◯ Check the lead wire connectors and the control circuit section connectors. ◯ Check the power supply. (refer to page 63) ◯ Check the Lossnay address and the group setting (LED2 lights when not using M-NET. This is no error.)
2	Interlocked operation with external device (air conditioner) does not occur.	◯ The type of external signal does not match the connected terminal unit (charged, uncharged, Mr. Slim signal). ◯ The type of external signal does not match the pulse input switch (SW2-2) setting (level signal, pulse signal). ◯ The external device signal is not being input. ◯ The external device and signal cable wiring is longer than specifications. (12V DC, 24V DC: Longer than limitations of external device Uncharged a-contact: Longer than 500 m Mr. Slim signal: Longer than 500 m) ◯ The Delayed Start mode is set at the remote controller (PZ-41SLB-E) or the function select switch (SW5-1) on the Lossnay circuit board. ◯ The ON Interlocked Operation mode or OFF Interlocked Operation mode is set at the remote controller (PZ-41SLB-E) or the function select switch (SW5-7, 8) on the Lossnay circuit board. ◯ When using multiple Lossnay units, the external control input signal is connected to a unit with the “Sub” setting made. ◯ In a group of multiple Lossnay units with the M-NET, the external control input signal is connected to a Lossnay unit other than the one with the smallest address. ◯ There is a communication error with the remote controller or controller.	◯ Check the external signal type and the external control input terminal (TM2) connection. (refer to page 65, 66) ◯ Check the external signal type and the pulse input switch (SW2-2) setting. (refer to page 66) ◯ Check the external device. ◯ Check the wiring length of the signal cable. ◯ Check the delayed start settings of the remote controller (PZ-41SLB-E) and the function select switch (SW5-1). (refer to page 70, 75) ◯ Check the interlocked operation mode settings of the remote controller (PZ-41SLB-E) and the function select switch (SW5-7, 8). (refer to page 72, 75) ◯ Connect the external control input signal to the Lossnay set to “Main.” (refer to page 66) ◯ Connect the external control input signal to the Lossnay in the group with the lowest address. ◯ Check the remote controller or controller.
3	Fan will not stop.	◯ The trial operation switch (SW2-1) is ON.	◯ Check the test operation switch (SW2-1). (refer to page 69)
4	Lossnay operates when main power is turned on.	◯ The PZ-41SLB-E is being used. ◯ By using the M-NET, the power supply ON/OFF setting is set to ON at the function select switch (SW2-6) on the Lossnay circuit board. ◯ By using the M-NET, the automatic recovery following power supply interruption (refer to page 68) setting is made at the function select switch (SW5-4) on the Lossnay circuit board.	◯ When the main power supply is turned off while the Lossnay is operating from the remote controller, the Lossnay will resume operation when the main power is turned back on (this is no error). ◯ Check the power supply ON/OFF setting of the function select switch (SW2-6). (refer to page 70) ◯ Check the automatic recovery following power supply interruption setting of the function select switch (SW5-4). (refer to page 71)

No.	Symptom	Cause	Corrective action
5	Supply air fan periodically stops operating.	◯ When the outdoor air temperature is -10°C or less, operation stops after a fixed period of about 10 minutes to keep the Lossnay Core from freezing. (Cold weather area spec) ◯ When connected to a Mr. Slim or a City Multi by a duct, operation stops when the air conditioner is defrosting.	◯ This is no error. ◯ This is no error.
6	Takes in air from outdoors during interlocked operation with a Mr. Slim or a City Multi, but supply air fan doesn't stop operating when defrosting.	◯ The indoor unit's outside air intake selection is invalid.	◯ Set the outdoor air intake selection of a indoor unit to "ON."
7	The supply air fan and exhaust fan both periodically stop operating.	◯ When connected to Mr. Slim or City Multi by a duct and the function select switch (SW5-3) on the Lossnay circuit board is ON, operation stops when the air conditioner is defrosting.	◯ Check the function select switch (SW5-3). (refer to page 71)
8	Fan speed will not change.	◯ The High/Low switching extermary input (CN16) is set to ON. ◯ The function select switch (SW2-4, 5) on the Lossnay circuit board is set to the high fixed or low fixed fan speed. ◯ The trial operation switch (SW2-1) is turned ON.	◯ Check the High/Low change input (CN16). (refer to page 67) ◯ Check the function select switch (SW2-4, 5). (refer to page 70) ◯ Check the trial operation switch (SW2-1). (refer to page 72)
9	Damper board does not operate.	◯ The outside air temperature is less than 8°C. ◯ The damper board operation is defective. ◯ The thermistor related connectors are not securely connected. ◯ The damper related connectors are not securely connected. ◯ The trial operation switch (SW2-1) is turned ON. ◯ When using the remote controller to change ventilation mode, there may be a delayed start of up to 30 seconds depending on the timing.	◯ Check the outdoor air temperature. ◯ Remove the load and check or move the damper board by hand. ◯ Check the connections of the lead wire connectors and the circuit connectors. ◯ Check the connections of the lead wire connectors and the control circuit connectors. ◯ Check the trial operation switch (SW2-1). (refer to page 72) ◯ This is no error.
10	Operation monitor output is late with regard to external control input ON/OFF.	◯ When using the PZ-41SLB-E there is a maximum delay of 7 seconds, or without using there is a maximum delay of 3 seconds.	◯ This is no error.
11	Operation monitor output is OFF during operation.	◯ When the function select switch (SW5-2) on the Lossnay circuit board is ON, for operation monitor output for interlocked operation with the supply air fan, it turns OFF when the outside air is -10°C or less or when the air conditioner is defrosting.	◯ Check the function select switch (SW5-2). (refer to page 71)
12	Delayed start operation does not work when Delayed start is set.	◯ When using the PZ-41SLB-E, the circuit function select switch is set for delayed start.	◯ Set delayed start at the remote controller (the circuit board switch is not in effect when using the PZ-41SLB-E). (refer to page 75)
13	Lossnay does not operate when power is on even when the power on/off setting is made.	◯ Using the PZ-41SLB-E.	◯ The power supply ON/OFF setting is not in effect when using PZ-41SLB-E.
14	Interlocked operation is different from the settings.	◯ When using the PZ-41SLB-E, the circuit function select switch is set for interlocked operation.	◯ Set interlocked operation at the remote controller (the circuit board switch is not in effect when using the PZ-41SLB-E). (refer to page 75)

Temperaturers vs. thermistor resistance table

Temperature (°C)	Resistance value (kΩ)	Temperature (°C)	Resistance value (kΩ)	Temperature (°C)	Resistance value (kΩ)	Temperature (°C)	Resistance value (kΩ)	Temperature (°C)	Resistance value (kΩ)
-40	88.85 - ∞	-7	17.92	8	9.57	23	5.38	38	3.17
⋮	⋮	-6	17.16	9	9.20	24	5.19	39	3.06
-20	32.43	-5	16.43	10	8.84	25	5.00	40	2.96
-19	30.92	-4	15.74	11	8.49	26	4.82	41	2.86
-18	29.50	-3	15.08	12	8.17	27	4.65	42	2.77
-17	28.14	-2	14.45	13	7.85	28	4.49	43	2.68
-16	26.87	-1	13.86	14	7.55	29	4.33	44	2.59
-15	25.65	0	13.29	15	7.27	30	4.18	45	2.51
-14	24.51	1	12.74	16	6.99	31	4.03	46	2.43
-13	23.42	2	12.22	17	6.73	32	3.89	47	2.35
-12	22.39	3	11.72	18	6.48	33	3.76	48	2.28
-11	21.41	4	11.25	19	6.24	34	3.63	49	2.21
-10	20.48	5	10.80	20	6.01	35	3.51	50	2.14
-9	19.58	6	10.37	21	5.79	36	3.39	⋮	⋮
-8	18.73	7	9.96	22	5.58	37	3.28	87.5 -	0.72 - 0

11.3 Circuit Test Point

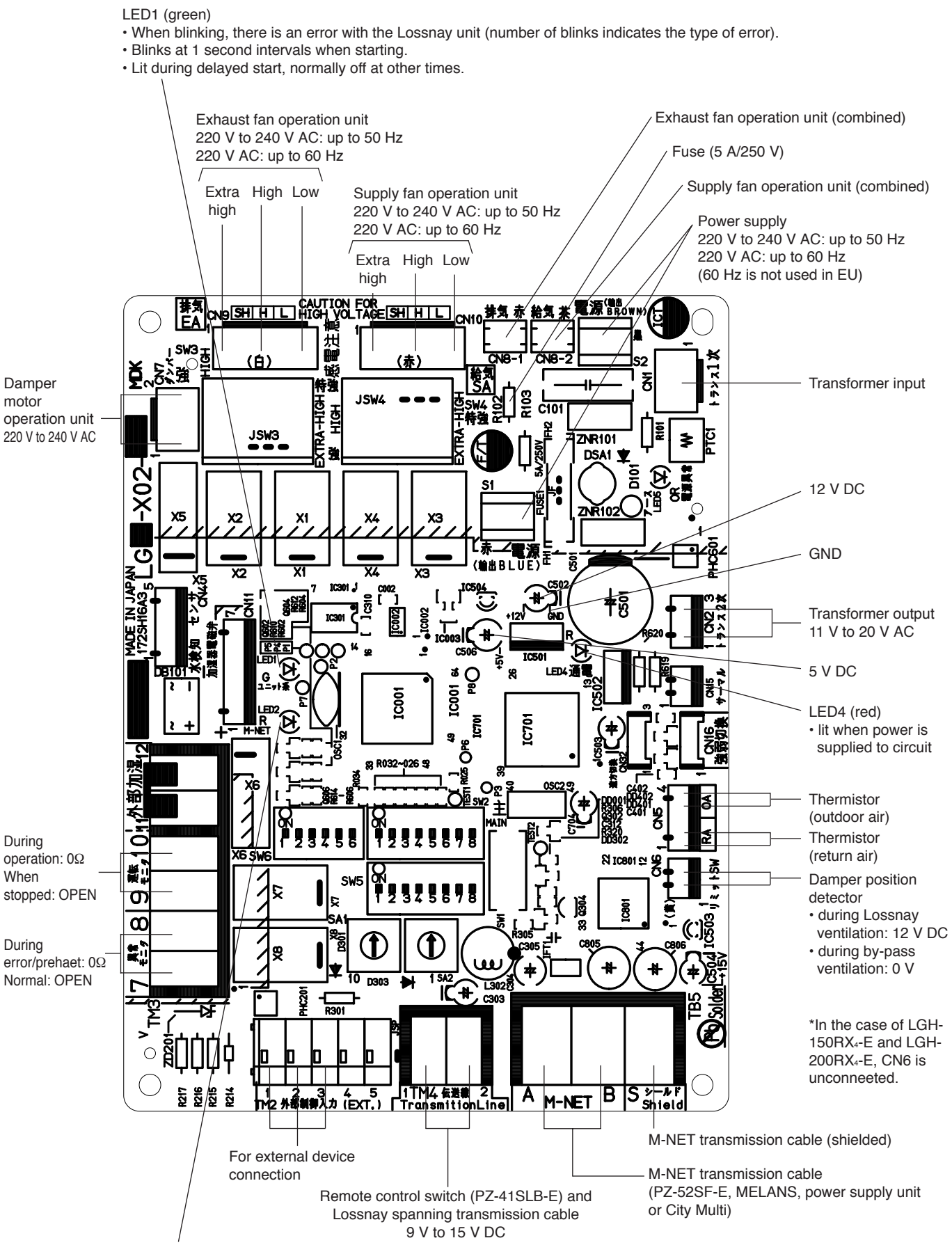

12. Installation method (Model LGH-RX4-E series)

12.1 Electrical installation

With this product, the wiring installation method will vary according to the design of the system. Perform electrical installation for each of the required sections.

12.1.1 Names of components in control box

LGH-15 to LGH-100RX4

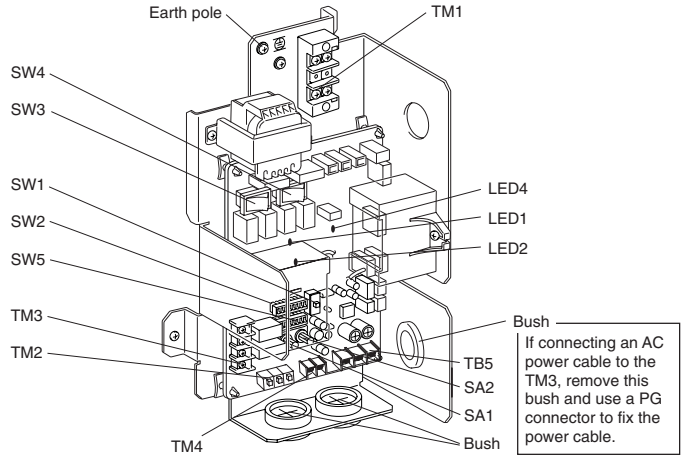

LGH-150 and LGH-200RX4

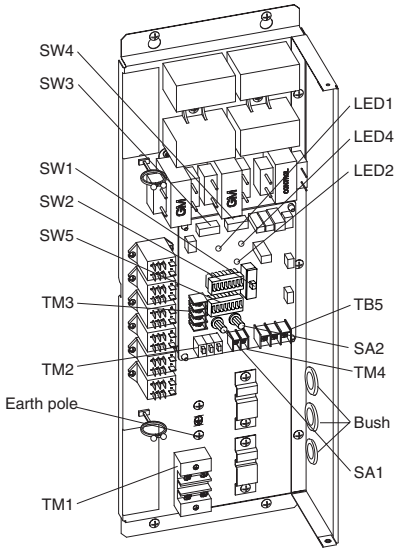

12.1.2 Wire connection diagram ----- Models LGH-15 to 100RX4

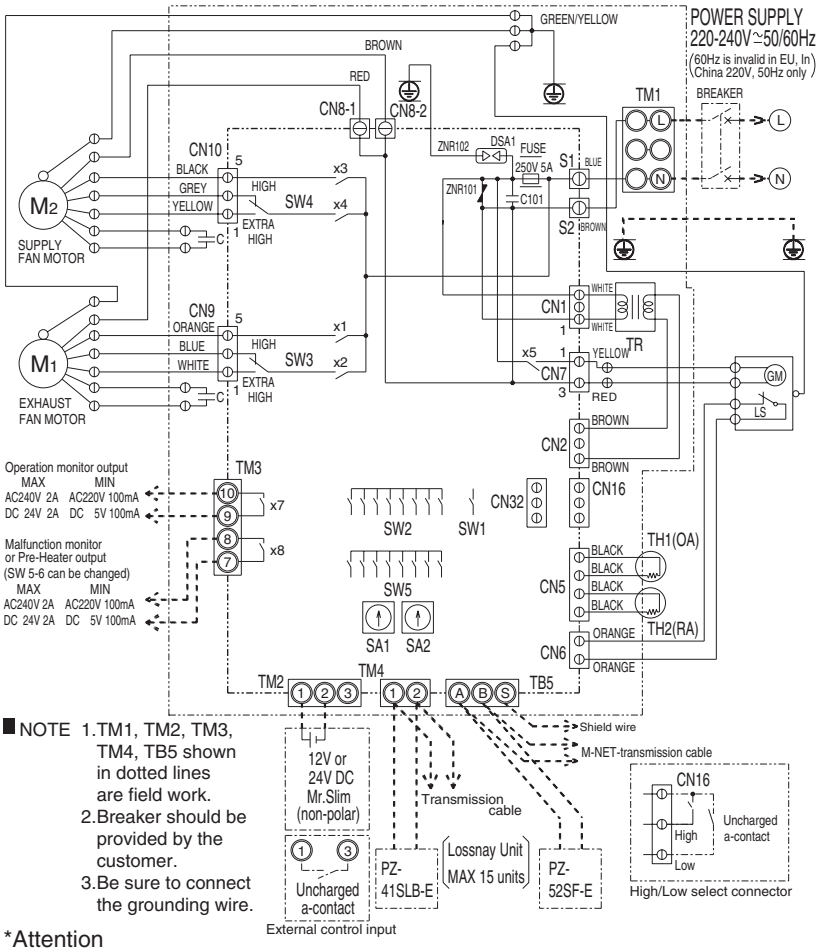

■NOTE 1.TM1, TM2, TM3, TM4, TB5 shown in dotted lines are field work.
2.Breaker should be provided by the customer.
3.Be sure to connect the grounding wire.

*Attention
1.This must be used with Mitsubishi Electric Air-Conditioner Network System. (MELANS)
2.External control input (TM2) is impossible to use on the Lossnay addressed to "Sub" (SW1) unit.
3.PZ-41SLB-E and PZ-52SF-E cannot be used simultaneously.

Symbol explanation	
M1:	Motor for exhaust fan
M2:	Motor for supply fan
C:	Capacitor
GM:	Motor for Bypass movement
LS:	Microswitch
TH1:	Thermistor for outside air
TH2:	Thermistor for return air
SW1:	Switch (Main/Sub change)
SW2, 5:	Switch (Function selection)
SW3:	High/E. high select switch (Exhaust fan)
SW4:	High/E. high select switch (Supply fan)
TM1:	Terminal block (Power supply)
TM2:	Terminal block (Transmission cable and external control input)
TM3:	Terminal block (Monitor output)
*1 TB5:	Terminal block (M-NET Transmission cable)
S1, S2:	Connector (Power supply)
TR:	Control circuit transformer
X7:	Relay contact (For operation monitor output)
X8:	Relay contact (For malfunction monitor output)
CN1:	Connector (Transformer primary)
CN2:	Connector (Transformer secondary)
CN5:	Connector (Thermistor)
CN6:	Connector (Microswitch)
CN7:	Connector (Motor for Bypass operation)
CN8-1:	Tab connector (Fan motor)
CN8-2:	Tab connector (Fan motor)
CN9:	Connector (Fan motor)
CN10:	Connector (Fan motor)
CN16:	Connector (High/Low switch)
CN32:	Connector (Remote control selection)
*1 SA1:	Address setting rotary switch (10 digit)
*1 SA2:	Address setting rotary switch (1 digit)
MARK	◎ : Indicates terminal block ⦶ : Connector ⦶ : Board insertion connector or fastening connector of control board

12.1.3 Wire connection diagram ----- Models LGH-150 and 200RX3

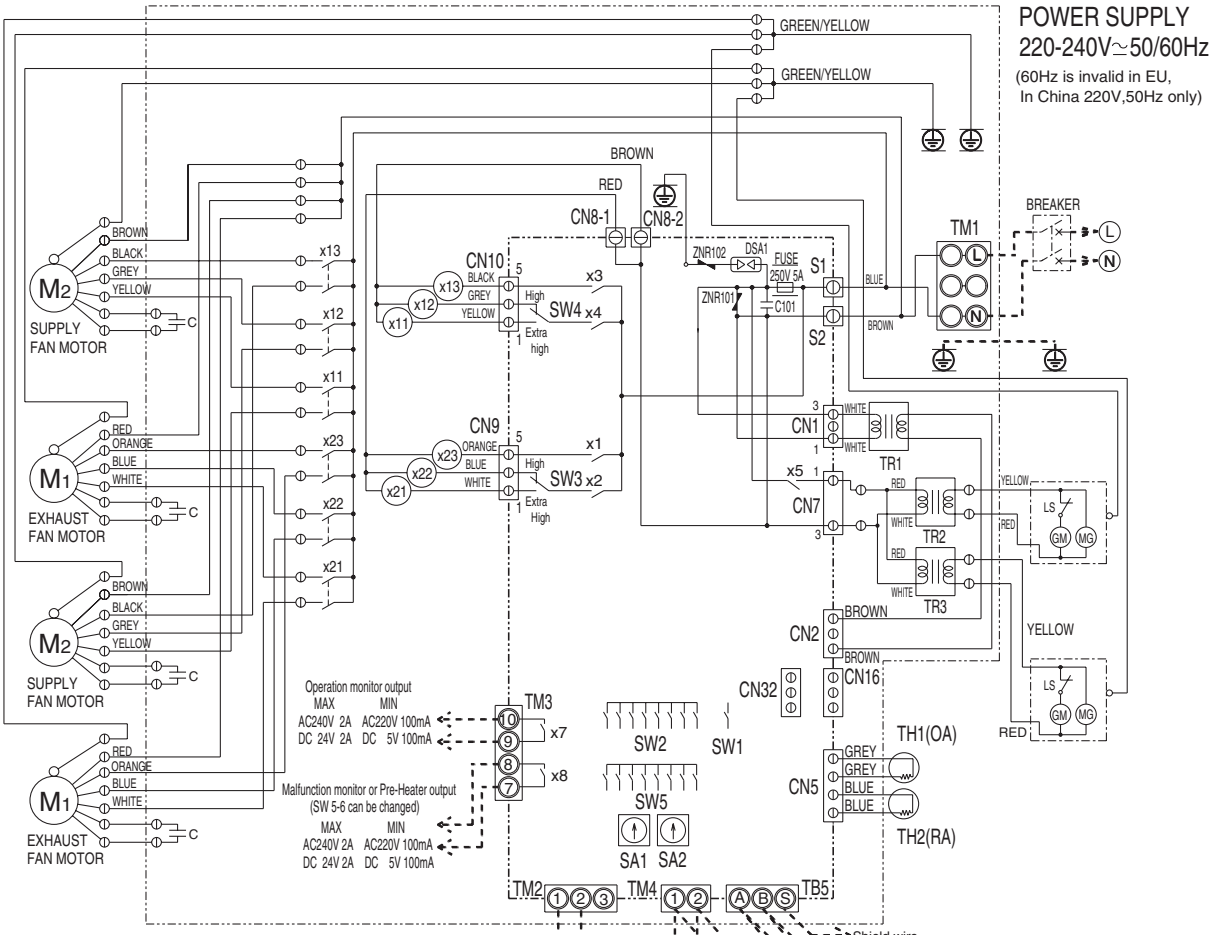

■NOTE 1.TM1, TM2, TM3, TM4, TB5 shown in dotted lines are field work.
2.Breaker should be provided by the customer.
3.Be sure to connect the grounding wire.

*Attention

1.This must be used with Mitsubishi Electric Air-Conditioner Network System. (MELANS)
2.External control input (TM2) is impossible to use on the Lossnay addressed to "Sub" (SW1) unit.
3.PZ-41SLB-E and PZ-52SF-E cannot be used simultaneously.

Symbol explanation

M1:	Motor for exhaust fan	X8:	Relay contact (For malfunction monitor output)
M2:	Motor for supply fan	CN1:	Connector (Transformer primary)
C:	Capacitor	CN2:	Connector (Transformer secondary)
GM:	Motor for Bypass movement	CN5:	Connector (Thermistor)
LS:	Microswitch	CN7:	Connector (Motor for Bypass operation)
TH1:	Thermistor for outside air	CN8-1:	Tab connector (Fan motor)
TH2:	Thermistor for return air	CN8-2:	Tab connector (Fan motor)
SW1:	Switch (Main/Sub change)	CN9:	Connector (Fan motor)
SW2, 5:	Switch (Function selection)	CN10:	Connector (Fan motor)
SW3:	High/E. high select switch (Exhaust fan)	CN16:	Connector (High/Low switch)
SW4:	High/E. high select switch (Supply fan)	CN32:	Connector (Remote control selection)
TM1:	Terminal block (Power supply)	*1 SA1:	Address setting rotary switch (10 digit)
TM2:	Terminal block (Transmission cable and external control input)	*1 SA2:	Address setting rotary switch (1 digit)
TM3:	Terminal block (Monitor output)	MARK	◎ : Indicates terminal block ⦶ : Connector ⊡ : Board insertion connector or fastening connector of control board
*1 TB5:	Terminal block (M-NET Transmission cable)		
S1, S2:	Connector (Power supply)		
TR:	Control circuit transformer		
X7:	Relay contact (For operation monitor output)		

12.2 Connecting the power supply cable

LGH-15 to 100RX4

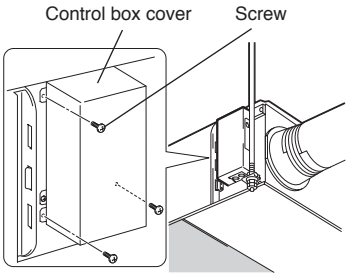

LGH-150 and 200RX4

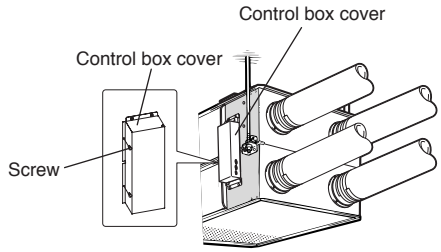

1. Remove the screws and open the control box cover

LGH-15 to 100RX4

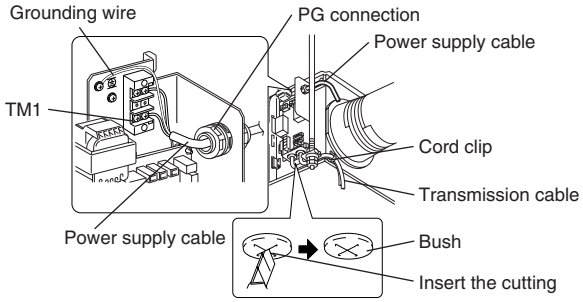

LGH-150 and 200RX4

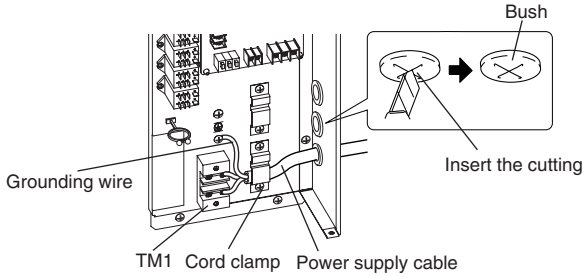

2. Connecting the power supply cable and transmission cable

Pass the power cable through the bush* and connect to the TM1 terminal block using the round terminals. Connect the grounding wire to the grounding terminal and secure tightening the bush. (*: for PG connection or the like)

⚠ CAUTION

- Always separate the power supply cable and transmission cable by 5 cm or more to prevent malfunctioning of the unit.
- If the length of the stripped power cables wires is too long, the conductors may touch and cause shorting.
- Power supply cable size : 1.5mm^2 or more.

(1) Refer to the wiring diagram and screw down the grounding wire and transmission cables to the terminal block.
(2) Secure the power supply cable and transmission cables using the cord clamp.

Upon completion of the wiring connections, replace the control box cover.

LGH-15 to 100RX4

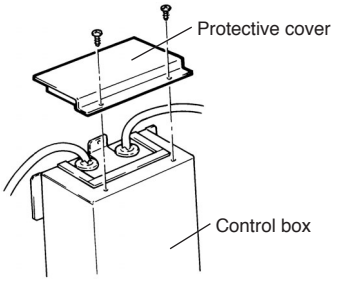

<When installing upside down>

3. When installing upside down

⚠ CAUTION

- If installing and using this product upside down, the power supply cable outlet will be at the top. Be sure to attach the protective cover so that no drops of water can get inside the control box.

LGH-15 to 100RX4

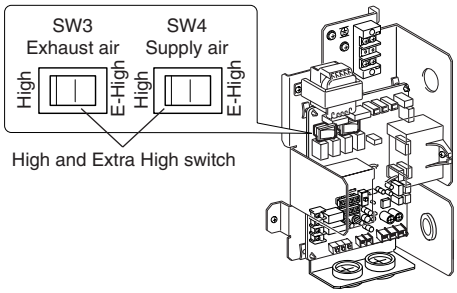

4. Changing the switch for High and Extra High

To increase the air volume, change the switch from “high” to “extra high”.

- The factory setting is “High”.
- Can be switched for each supply and exhaust separately.

Multi ventilator mode is possible (Refer to page 70)

LGH-150 to 200RX4

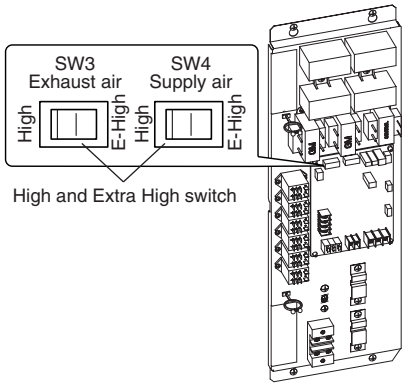

The following system configuration can be created. Connect the necessary parts.

1. When connecting with remote controller (PZ-41SLB-E).
2. When interlocking with air conditioner or other external device.
3. When interlocking with a pulse output device.
4. When operating multiple Lossnay units.
5. When switching high/low speed extemally (when CO_2 sensor or other device is connected).
6. When connecting to the Pre-heater.
7. If you would like to fetch Malfunction monitor output.
8. If you would like to connect to a Electrically operated damper Booster fan, etc., or would like to fetch operation monitor output:
9. When connecting to City Multi, Lossnay remote controller (PZ-52SF-E) or Mitsubishi Electric Air-Conditioner Network System (MELANS).

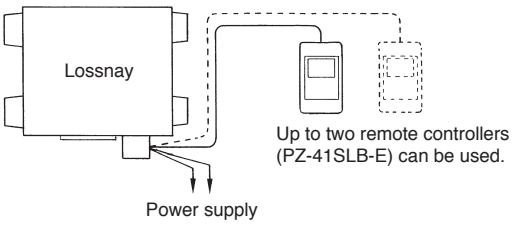

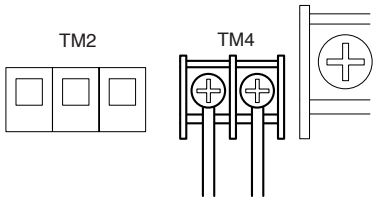

1. When connecting with remote controller (PZ-41SLB-E)

*The PZ-41SLB-E cannot be used when centralized control of the Lossnay is used. Then follow the procedure for connecting the wire shown in 6. and use the Lossnay remote controller (PZ-52SF-E).

Securely connect the transmission cable (PVC insulated PVC jacketed and either between ø0.65 and ø1.2, or between 0.3 mm^2 and 1.25 mm^2 in cross section) from the remote controller to ① and ② of the input terminal block (TM4). (No polarity)

- If there are two remote controllers, connect them in the same way.

Note:

- Up to four 0.3 mm^2 stranded wires or ø0.65 PVC wires can be connected to one input terminal.
- For other types of wire up to two can be connected.

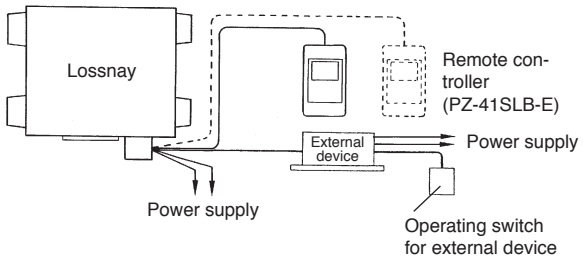

2. When interlocked with air conditioner or other external device

(1) Connect the output signal cable from the external device to the input terminal block (TM2) of the external controller.

⚠ CAUTION

- The connection may vary according to the output signal type of the external unit.

(2) Confirm that the pulse input switch (SW2-2) is set to "OFF". (Set to "OFF" at time of shipment.)

When using Mr. Slim air conditioner and (A control or K control) Interlock operation of except Mr. Slim (A control or K control) unit is not possible.

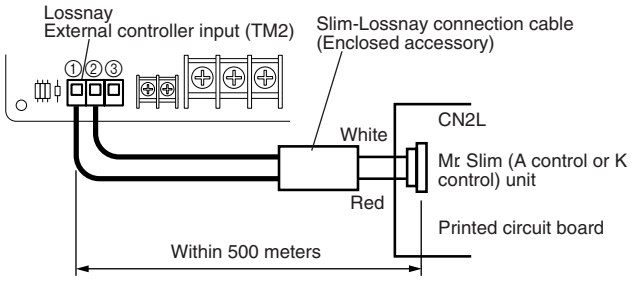

Connect the interlocking cable connector side to CN2L on the circuit board for the indoor Mr. Slim unit and connect the lead wire side to the ① and ② of the input terminal block (TM2) for the Lossnay external controller input. (No polarity)

- Always separate the power supply cable and the Slim-Lossnay connection cable for the Lossnay by 5 cm or more to prevent malfunctioning of the unit.
- The Slim-Lossnay connection cable is 0.25 m long. When wiring, extend it as far as necessary.
- It is necessary of perform the interlock operation setting to the Lossnay using the (A control) remote controller. For the setting method, refer to the (A control) remote controller's installation manual or the Mr. Slim technical guide.

Note:

- The Lossnay remote controller (PZ-41SLB-E) cannot be used with this system.
- The ventilation mode is "automatic ventilation".
- The Slim-Lossnay connection cable may be extended to a maximum length of 500 m (Extension cable specifications are as detailed below). Ensure that all connections are secure and that the appropriate insulation is provided.
  Extension cable sheathed PVC cable or cable-0.5 mm^2 to 1.0 mm^2.

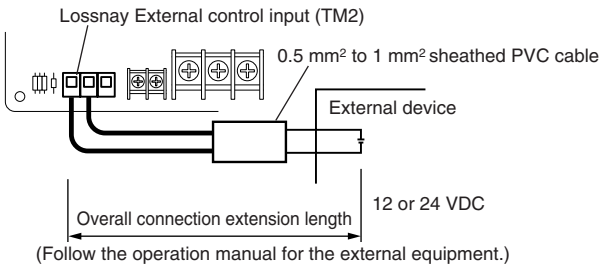

When the external device has a charged operating signal of 12V DC or 24V DC

- Connect the operating signal (wire) from the external device via the remote output retrieval component (sold separately) to ① and ② on the external control input terminal block (TM2). (No polarity)

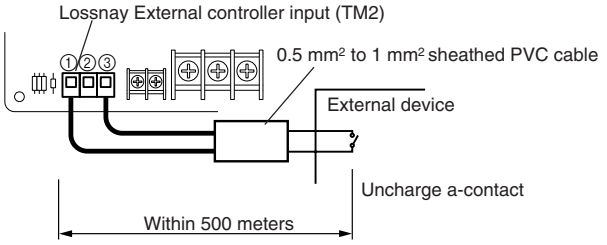

When the external device has an uncharged a-contact signal

- Connect the operating signal (wire) from the external device via the remote output retrieval component (sold separately) to ① and ③ on the external control input terminal block (TM2).

CAUTION:

- If an photo coupler or any other type of polar coupler is used at the uncharged a-contact, connect the positive side to ③ and the negative side to ①.

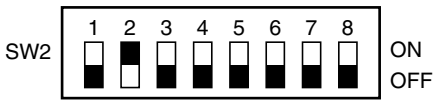

3. When interlocking with a pulse output device

(1) Move the pulse input switch [SW2-2] to the ON position.
(2) Connect the pulse output device (i.e., building management system) to the external control input terminal block [TM2].
  - A pulse width of at least 200 msec will be needed.
(3) Wiring is to be performed in the same way as for item 2 above.

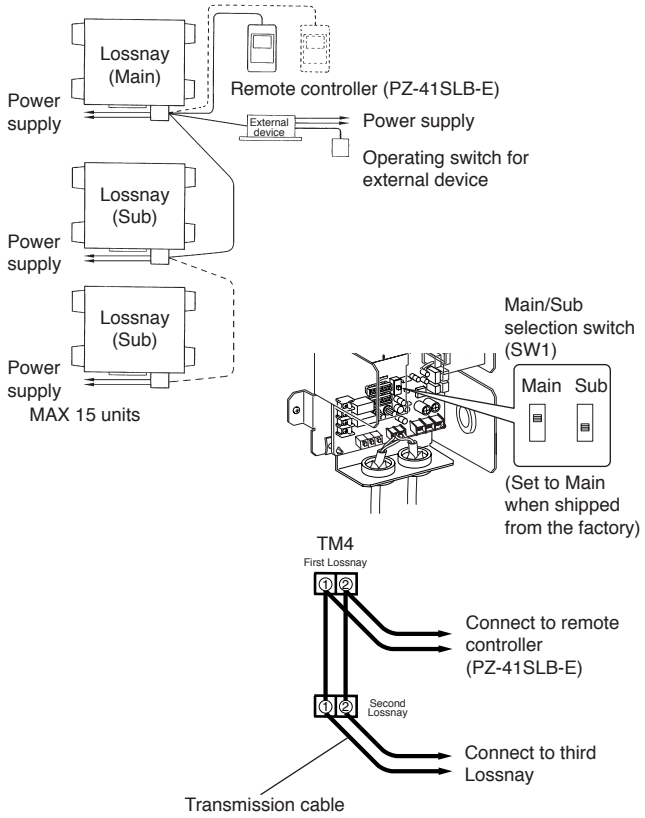

4. When operating multiple Lossnay units

(1) Connect from Lossnay Unit 1 to Lossnay Unit 2, and from Unit 2 to Unit 3 and so on up to a maximum of 15 units using a transmission cable (PVC insulated PVC jacketed and either between ø0.65 and ø1.2, or between 0.3 mm² and 1.25 mm² in cross section).
(2) Change the setting on the main/sub switch (SW1) on the second and subsequent Lossnay units to “sub”.

Note:

- Up to four 0.3 mm² stranded wires or ø0.65 PVC wires can be connected to one input terminal.
- For other types of wire up to two can be connected.
- The operation signal and pulse signal can be connected to the external device of the main Lossnay only.
- Connect the power to each respective Lossnay unit.
- When interlocking with Mr. Slim, connect to Lossnay unit 1 according to page 65, and connect from unit 1 to unit 2, and from unit 2 to unit 3 as indicated above.

5. When switching high/low speed externally (when CO_2 sensor or other device is connected)

If a commercially available CO_2 sensor or other such device is used as shown in the drawing, connect by inserting Remote ON/OFF Adaptor* (PAC-SE55RA-E) (sold separately) to the CN16 connector (for switching between high/low).

* Note that if the remote controller is connected to a CO_2 sensor, the actual high and low fan speeds may not match on the remote controller.

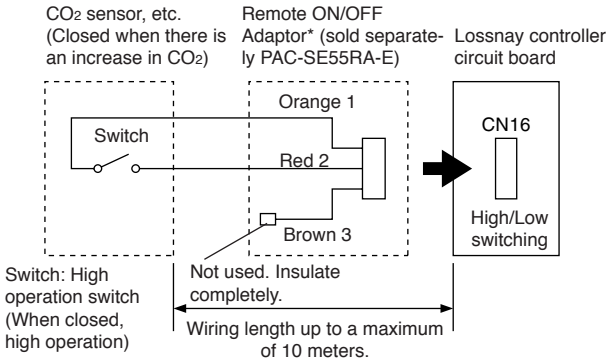

- To force high speed externally
  When external switch is “ON” fan speed of the Lossnay will be set to “high”.
  Regardless of the remote control setting.

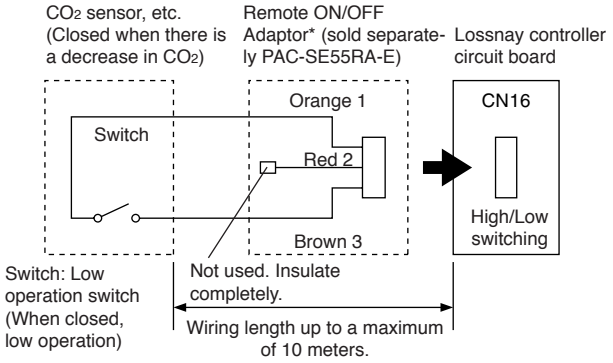

- To force low speed externally
  When external switch is “ON” fan speed of the Lossnay will be set to “low”.
  Regardless of the remote control setting.

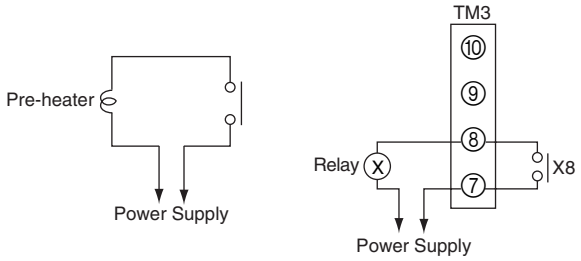

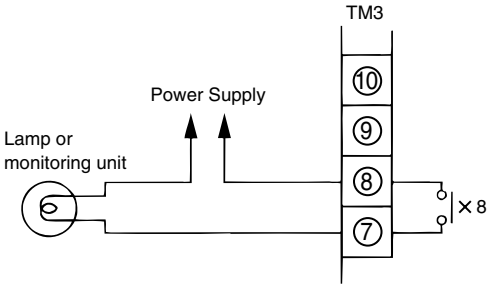

NEW

6. When connecting to the Pre-heater

(1) Connect wires as left.
(2) Turn on SW5-6 on PCB. Refer to page 71.

Note:

(1) Install the relay which have rating more than Pre-heater input.
(2) Select the Pre-heater capacity as following table for your reference to make outdoor air temperature rises less than 20K. Refer to page 40.

7. If you would like to fetch Malfunction monitor output

Connect to ⑦ and ⑧ of the monitor output terminal block (TM3) with reference to the wire connection diagram.

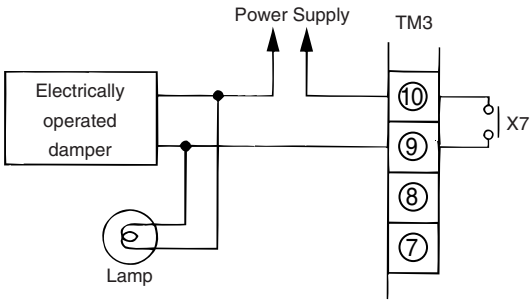

8. If you would like to connect to a Electrically operated damper Booster fan, etc., or would like to fetch Operation monitor output:

Connect the power supply line from the Electrically operated damper Booster fan to ⑨ and ⑩ of the monitor output terminal block (TM3) with reference to the wire connection diagram.

* Response times to external input signals are as shown in the following table.

External Signal Form	Response Time
Level Signal	Max. 7 sec.
Pulse Signal	Max. 200 msec

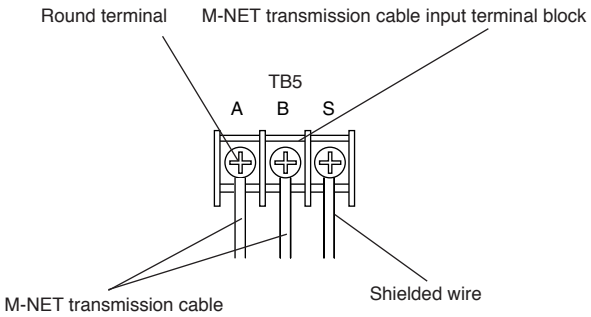

9. When connecting to the City Multi, Lossnay M-NET remote controller (PZ-52SF-E) or Mitsubishi Electric Air-Conditioner Network System (MELANS)

* If centralized control is performed according the wire connection shown in this section, the remote controller (PZ-41SLB-E) cannot be used.

- One shieled wire is connected to the other shieled wire. (Terminal connection)

Address setting is required. (Refer to function setting section.)

M-NET transmission cable: Connect any of the following -- City Multi indoor unit, Lossnay remote controller (PZ-52SF-E) or Mitsubishi Electric Air-Conditioner Network System (MELANS) - to the Lossnay.

Type: (Shielded wire, CVVS/CPEVS)

Wire diameter: 1.25 mm^2 to 2.0 mm^2

- Securely connect the M-NET transmission cable to Ⓐ and Ⓑ on the transmission cable input terminal block (TB5). (Non-Polar)

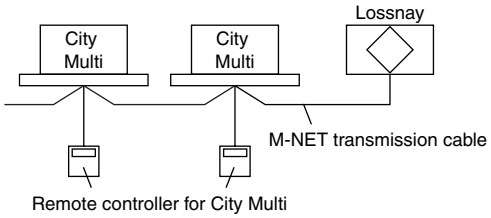

When interlocking with the City Multi

- Keep the overall length of the transmission cable within 500 meters. Note that the wiring length between the Lossnay and power supply unit (sold separately) or outdoor unit should be 200 meters or less.

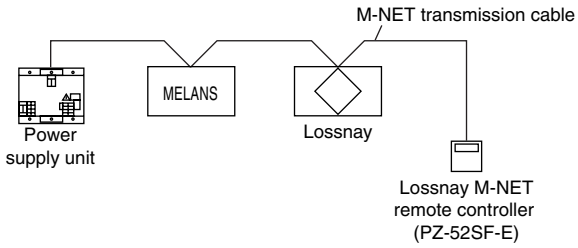

Lossnay M-NET remote controller (PZ-52SF-E) or MELANS

- Connect the power supply unit (PAC-SC50KUA)

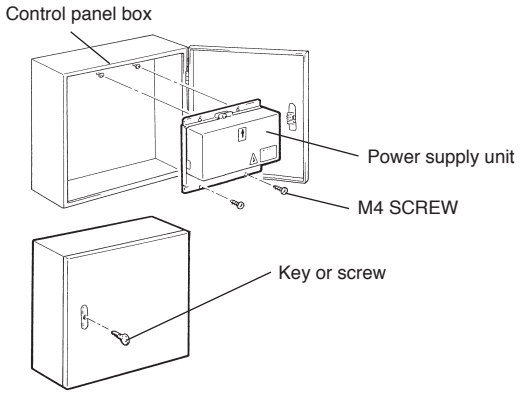

● To use the power supply unit

Install the power supply unit on the control panel box as follows.

(1) Screw the M4 SCREWS into the control panel box enough to keep them from falling out of place. Set them towards the top of the box.
(2) Hang the power supply unit (from the top end) on the M4 SCREWS.
(3) Lock the bottom end down with the M4 SCREW.
(4) Tighten the top end screw securely.
(5) Once installed, close the control panel box door for safely reasons and lock with the key or screw.

For more information, see the installation manual of the power supply unit.

12.3 Function settings

You must set the address when connecting to the City Multi, Lossnay M-NET remote controller (PZ-52SF-E) and MELANS.

12.3.1 Setting the address

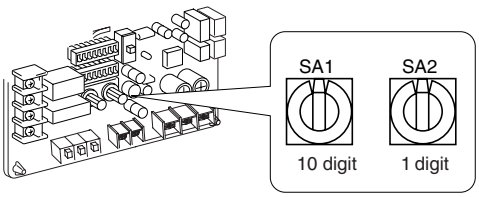

* When the address number has been changed, the data in the memory is automatically reset.

Use the following procedure when performing the address setting for dedicated Lossnay.
(The method to be employed in the determination of addresses will be dependent on the existing system. Refer to the appropriate technical documents for details.)

(1) Remove the control box cover.
(2) Use a straight-blade screwdriver to turn the address setting switch on the circuit board.
  • SA1 indicates the 10 digit and SA2 indicates the 1 digit.
  • The factory setting is “00”

12.3.2 Switching function selection

Perform the necessary function settings using the function selection switches (SW-2 and 5).
• The setting can be changed at any time.

1. Settings for pulse input

Set as shown when connecting the pulse signal equipment from a building maintenance system to an external input.

	OFF ON	Mode
SW2	2 ■□	No pulse input (factory setting)
	2 □■	Pulse input

2. Switching to power exhaust when operation starts

This sets the fan to run forcibly for 30 minutes when operation starts to ventilate the indoor area. After 30 minutes, the system switches to enable fan speed adjustment from the remote controller. Use this setting if the indoor air is contaminated at night when the system is shut down and you desire to ventilate the indoor area quickly when operation is started in the morning.

	OFF ON	Operation
SW2	3 ■□	Normal (factory setting)
	3 □■	Runs the fan forcibly for 30 minutes when operation starts.

3. Switching to the multi ventilation mode (Combination SW3, SW4 and SW2-4, 5)

This sets the ventilation system to in the case that ventilation balance in accordance with the use environment and installation location is selected. There are four possible setting modes.

	OFF ON	Mode	Operation
SW2	4 5	Power Ventilation Normal (factory setting)	The fan speed altemates between the High (Extra high) and Weak settings instead of the remote controller setting.
	4 5	Power Supply	Runs the exhaust fan side at low speed constantly. Alternates the intake fan speed between the High (Extra high) and Weak settings.
	4 5	Power Exhaust	Runs the suppy fan side at low speed constantly. Alternates the exhaust fan speed between the High (Extra high) and Weak settings.
	4 5	Energy-saving Ventilation	Runs the suppy and exhaust fans at low speed constanlty. Switches to the Power Save Ventilation setting regardless of the remote controller's High or Weak setting.

RX4 type is available to make 9 fan speed setting patterns of SA and EA fans for High notch.
RX3 type (previons model) have only 4 fan speed patterns for High.
Setting on PCB dip switch table.
(SW3, SW4 setting refer to page 64)

	Switch for High and E-High					Remote Controller				Model comparison		
	Dip switch		Switch for High and E-High			High		Low		RX4	RX3 (previous model)	
	SW2-4	SW2-5	SW4	SW3		SA	EA	SA	EA			
Power supply / Exhaust mode	Off	Off	E-High	E-High	→	E-High	E-High	Low	Low	○	○	
	Off	Off	High	High	*→	High	High	Low	Low	○	○	*1
	Off	Off	High	E-High	→	High	E-High	Low	Low	○	○	
	Off	Off	E-High	High	→	E-High	High	Low	Low	○	○	
Power supply mode (Fixed exhaust fan at Low mode)	Off	On	E-High	Not Available	→	E-High	Low	Low	Low	○	×	
	Off	On	High	Not Available	→	High	Low	Low	Low	○	×	
Power Exhaust mode (Fixed Supply fan at Low mode)	On	Off	Not Available	E-High	→	Low	E-High	Low	Low	○	×	
	On	Off	Not Available	High	→	Low	High	Low	Low	○	×	
Energy saving ventilation mode Fixed both of fans at Low mode	On	On	Not Available	Not Available	→	Low	Low	Low	Low	○	△ (SW2-4Off, SW2-5On)	

*Factory setting

4. Power supply start/stop function (cannot be set when PZ-41SLB-E is used)

Set can be switch when operation and stopping is performed by turning the power supply (220-240 V) for the Lossnay on and off.

	OFF ON	Mode	Operation
SW2	6	OFF (factory setting)	Stopping and operation is performed according to settings of SW5-4 when the power is on.
	6	ON	Operation possible by turning power on and off.

5. Settings for delay (of operation at start-up of heating or cooling)

This is the mode for delaying the operation of the Lossnay for 30 minutes when the City Multi or Mr. Slim is started and when a external device is started. (If the PZ-41SLB-E is used, set it at the remote control.)

	OFF ON	Mode
SW5	1	No operation delay (factory setting)
	1	Operation delay of 30 minutes * This function is invalid with in 2 hours' restart

6. Supply air fan monitor

	OFF ON	Mode
SW5	2 ■□	Corresponds to operation mode output (TM3 ⑨, ⑩) exhaust fan (factory setting)
	2 □■	Corresponds to operation mode output (TM3 ⑨, ⑩) supply fan (The operation monitor output is off when the supply fan is stopped for operation in cold regions or during the City Multi or Mr. Slim defrosting.)

7. Stopping exhaust fan when defrosting air conditioner

Sets the operation of the exhaust fan (when the air supply fan is stopped) during defrosting of the air conditioner when Mr. Slim or City Multi indoor unit is connected to a duct.

	OFF ON	Operation
SW5	3 ■□	Exhaust fan operation (factory setting)
	3 □■	Exhaust fan stopped

8. Settings for automatic recovery following power supply interruption (cannot be set when PZ-41SLB-E is used)

Sets for automatic recovery following power supply interruption.

	OFF ON	Mode	Operation
SW5	4 ■□	No automatic recovery (factory setting)	Stop after recovery
	4 □■	Automatic recovery	Recover to operate in mode used before power outage

In the case of PZ-41SLB-E is used, please refer to page 74, NOTE.

9. Settings for filter cleaning

Set the time for fillter cleaning based on the estimated concentration of dust in the air. The factory setting is unlimited. (If the PZ-41SLB-E is used, set it at the remote control. Refer to page 74.)

The two combinations of settings shown in the drawing to the bottom are available setting for fillter cleaning.

	OFF ON	Maintenance time
SW5	5 ■□	3000 hours
	5 □■	Unlimited (No“FILTER” display on remote controller) (factoly setting)

⚠ CAUTION:

- When the setting for the cumulative operation time of the Lossnay is exceeded, the filter cleaning display will appear on the air conditioner remote controller or the remote controller for the Lossnay. After cleaning the filter, the filter cleaning display can be reset by following the procedure for canceling the cumulative operation time as shown in the manual.

10. Settings for TM3 ⑦, ⑧ function to control Pre-heat unit

	OFF ON	Operation
SW5	6 ■□	Malfunction monitor (factory setting)
	6 □■	Pre-heat control output (* Refer to page 67)

11. Settings for interlock mode

These settings will indicate how the Lossnay should operate when external devices are started or stopped. (If the PZ-41SLB-E is used, set it at the remote control.)

	OFF ON	Mode	Operation
SW5	7 8	On/Off interlock (factory setting)	The Lossnay will start and stop in accordance with starting and stopping of the eternal devices. Subsequent operation will be possible using the remote controller for the Lossnay or MELANS.
	7 8	On interlock	The Lossnay will operate whenever the external devices are operated. Stopping of the Lossnay will be possible using its remote controller or MELANS.
	7 8	Off operation	The Lossnay will stop whenever the external devices are stopped. Starting of the Lossnay will be possible using its remote controller or MELANS.
	7 8	External input given priority	The Lossnay will start and stop in accordance with starting and stopping of the external devices. Control using the remote controller for the Lossnay or MELANS will only be possible when the external devices are stopped.

12.4 Trial operation

After the overall system has been installed, before the ceiling panel is installed, make sure that no wires are wrongly connected, then carry out trial operation, referring to the user's manual for the remote controller.

12.4.1 Trial operation with the remote controllers (PZ-41SLB-E and PZ-52SF-E)

Follow the procedure shown in the operator's manual for the remote controller for confirming the following items.
(1) Starting operation.
(2) Fan speed selection.
(3) Function selection.
(4) Stopping operation.

12.4.2 Lossnay independent trial operation

(1) Remove the control box cover.
(2) Turn the trial operation switch (SW2-1) "ON."
- Operation will start with the "High" setting and with Bypass ventilation operating. (This will take approximately 45 seconds after the power is turned on.)

(3) Turn the trial operation switch (SW2-1) "OFF."
(4) Install the cover in its original position on the control box.

	OFF ON	Operation
SW2	1	Power will be supplied to the motor for the Lossnay fan and operation will be performed at the "High" setting. Power will be supplied to the motor for the Lossnay by-pass and operation of the damper plate will be performed.

12.4.3 Trial operation within the complete system

■ Interlock system containing an air conditioner and/or external device
- Use the remote controller for the air conditioner or the operating switches for the external device and confirm that the air conditioner and Lossnay are interlocked.
- If delay time has been set, check that the Lossnay operates after the delay time has passed.

■ If MELANS System
- Use MELANS to confirm the operation of the Lossnay.

12.4.4 If trouble occurs during trial operation

<table>
<tr><th>Symptom</th><th>Remedy</th></tr>
<tr><td>Will not operate even when the operation switch for the remote controller (PZ-41SLB-E) and/or operation switch for the Lossnay remote controller (PZ-52SF-E) is pressed.</td><td>
• Check the power supply. (The specified power supply is single-phase 220-240 V ≃ 50 Hz, and 60 Hz.)
• Check for a short circuit or disconnection in the transmission cable. (Check that the voltage between terminals in the transmission cables is 9 to 15 V DC for the PZ-41SLB-E and 20 to 30 V DC for the PZ-52SF-E.)
• Check that the there is 5 cm or more separating the transmission cable from the power supply cable and any other transmission cables.
• Run the Lossnay independently using the trial operation switch (SW2-1) and check if it runs.
<table>
<tr><td>Lossnay runs</td><td>→</td><td>Check the signal lines</td></tr>
<tr><td>Lossnay doesn't run</td><td>→</td><td>Check the power supply</td></tr>
</table>
• Check if there are three or more remote controller connected (PZ-41SLB-E). (The maximum is two.)
</td></tr>
<tr><td>"HO" flashes in remote controller for Lossnay (PZ-52SF-E).</td><td>• Perform the registration operation using the remote controller for the Lossnay (PZ-52SF-E) or MELANS. (Refer to the installation instructions for the remote controller for the Lossnay or MELANS.)</td></tr>
<tr><td>Does not operate even when the operation switch for remote controller for Lossnay (PZ-52SF-E) or MELANS is pressed.</td><td>• Check whether or not there is a power supply unit and that the power has been turned on. (On systems with only a Lossnay, a power supply unit is required.)</td></tr>
<tr><td>Air conditioner or external device does not interlock.</td><td>
• Check if the pulse input switch (SW2-2) is off.
• Check the overall length between the air conditioner or external device and Lossnay. (Refer to technical publications or other such documents.)
• Check the connections at the external control input terminal block (TM2).
In the case of voltage charged 12 or 24 V DC output device: Connect to external control input terminals ① and ② .
In the case of uncharged a-contact output device: Connect to external control input terminals ① and ③.
In the case of Mr. Slim (A control or K control): Connect to external control input terminals ① and ②.
• Perform the registration operation using the remote control for the air conditioner or MELANS. (Refer to the installation instructions for the remote control for the air conditioner or MELANS.)
• Check if the delay has been set.
• Check the overall length of the transmission cable between the external device and Lossnay. (Refer to technical publications or other such documents.)
• Check if the transmission cable from the external device has come off of the external control input terminal.
<table>
<tr><th></th><th>Operation signal</th><th>Stop signal</th></tr>
<tr><td>Charged 12 or 24 V DC output device</td><td>12 or 24 V DC</td><td>0 V DC</td></tr>
<tr><td>Uncharged a-contact output device</td><td>Resistance: 0 Ω</td><td>Unlimited resistance Ω</td></tr>
<tr><td>Mr. Slim (A control or K control)</td><td>2 to 6 V DC</td><td>2 to 6 V DC</td></tr>
</table>
• Check, in the case of multiple units, whether the Main/Sub selection switch on the Lossnay unit which is connected to the external control input terminal is set on the Master setting, and check whether the Main/Sub selection switch on other Lossnay units are set to Sub.
</td></tr>
<tr><td>Lossnay does not stop.</td><td>• Check that the trial operation switch (SW2-1) is set to off.</td></tr>
<tr><td>The inspection indicator lamp (LED 1 Green) in the control box flashes.</td><td>
<table>
<tr><td>2 flashes</td><td>Failure of Lossnay circuit</td><td rowspan="5">Turn off the power and immediately contact your dealer.</td></tr>
<tr><td>3 flashes</td><td>Failure of damper motor system (15 to 100RX4 only)</td></tr>
<tr><td>4 flashes</td><td>Failure of Lossnay Thermistor (OA side)</td></tr>
<tr><td>5 flashes</td><td>Failure of Lossnay Thermistor (RA side)</td></tr>
<tr><td>8 flashes</td><td>Failure of Pre-heat unit</td></tr>
<tr><td>On</td><td>In delay period</td><td>If there is no remote controller (PZ-41SLB-E), the lamp will go out after 30 minutes (of operation) has passed.</td></tr>
</table>
</td></tr>
<tr><td>The inspection indicator lamp (LED 2 Red) in the control box flashes.</td><td>
<table>
<tr><td>1 to 8 flashes</td><td>Error in M-NET communication</td><td>Turn off the power and immediately contact your dealer.</td></tr>
<tr><td>ON</td><td>Registration operation has not been performed.</td><td>Use the controller to perform the registration.</td></tr>
</table>
</td></tr>
</table>

- When an inspection number blinks on the remote controller, follow the procedures shown in the installation and operating manuals provided with the remote controller.
- If the remote controller is not used, operate approximately 45 seconds after turning on the power for the Lossnay.

13. Lossnay Remote Controller (PZ-41SLB-E)

13.1 Operation

[2-CONTROLLERS] Display

Displayed when two Lossnay remote controllers operate the Lossnay unit(s). Note that the most recent button operations of either one will be given priority in such a case.

Ventilation Modes

Indicates the ventilation mode status.

Heat recovery (Heat exchange) HEAT EX.

By-pass BY-PASS

Automatic (Heat ex./By-pass) AUTO HEAT EX. or BY-PASS AUTO

Power Display

Displayed while the Lossnay remote controller is powered on.

[CHECK] Display

Displayed together with the malfunctioning unit (3 digits) and an error code (4 digits).

Delay time Display

Displays delay time.

Delay setting SETTING
XX MIN.DELAYED (XX:0-60)
During delay operation
XX MIN.DELAYED (XX:1-60)

Ventilation Mode Selector Button

Used to select the ventilation mode from among Heat recovery (Heat exchange). By-pass or automatic.

[DELAY START] Button

Used to set for delay time.

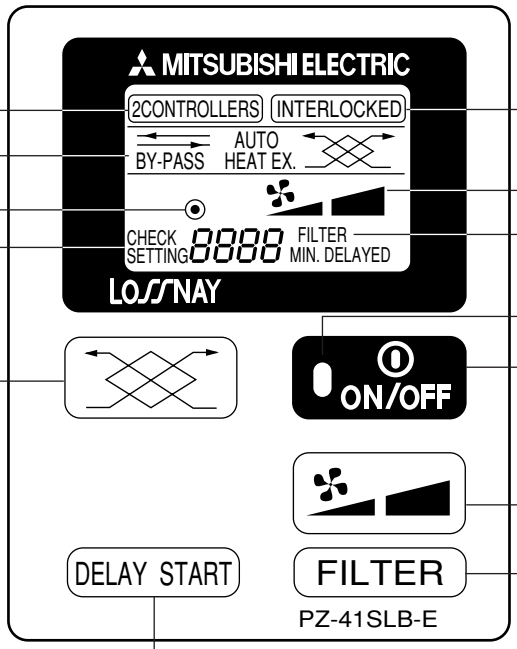

[INTERLOCKED] Display

Displayed when the Lossnay starts off by interlocked indoor unit or external signal.

Fan Speed Display

Displays the selected fan speed.

[FILTER] Display

Displayed when the accumulated operating time reaches at the time set for air filter maintenance.

Operation lamp

On during operation. Flashes when a malfunction occurs.

[ON/OFF] Button

Switches between run and stop. The lamp on the button stays lit during operation.

Fan Speed Adjustment Button

Used to select the fan speed of either "Low" or "High".

Low → High

[FILTER] Button

Press two times to reset the filter sign display.

* Entire panel is displayed for explanation.

Note:

- When power is restored after an outage or when the corresponding breaker for the distribution box is reset, all modes will return to the condition before the supply of power was interrupted.

13.2 Mode of Use

● Independent Operation of the Lossnay Unit:

Operation	Relevant button	Relevant display items	Sequence
1. Starting the Lossnay unit	ON/OFF Operation lamp	BY-PASS AUTO HEAT EX.	Press the ON/OFF button and confirm that the Operation lamp turns on. The 2CONTROLLERS display item will be turned on if a double set of remote controllers is currently in use.
2. Setting the Ventilation mode		AUTO HEAT EX. The above display indicates that the unit is operating in non-automatic, bypass ventilation mode.	Press the Function selector button: Each time it is pressed, the corresponding display will change in accordance with the sequence [HEAT EX.] (non-automatic) → [BY-PASS] (non-automatic) → [AUTO]. If [AUTO] is selected, the display will change to indicate the current situation after two seconds have passed. AUTO HEAT EX. or BY-PASS AUTO
3. Selecting the fan speed		AUTO HEAT EX. The above display indicates current operation with a gentle fan speed.	Press the Fan Speed selector button to select either Low or High fan speed.
4. Stopping the Lossnay unit	ON/OFF Operation lamp		Press the ON/OFF button. (Press the ON/OFF button to turn off the Operation lamp.)

● Interlocked Operation with Indoor unit or external signal.

The Lossnay unit can be set up in such a way that it may be turned on and off by external device such as an air conditioners. In such a case, the remote controller's [INTERLOCKED] display will be turned on. Note that the selection of ventilation mode and of fan speed can be performed in the same way as for independent operation of the Lossnay unit.

Settings for Interlocking the Lossnay unit with an external device

Setting	Relevant button	Relevant display items	Sequence
Delay time This setting is used to determine how long will elapse after the start of operation of the external device until the Lossnay unit begins to operate.	DELAY START Delay Start button	SETTING 30 MIN.DELAYED The above display indicates a delay time of 30 minutes.	Each time the Delay Start button is pressed, the delay time will change in accordance with the repeating sequence (minutes) 0 → 10 → 20 → 30 → 40 → 50 → 60 When the button is released before 5 seconds have elapsed, the display will turn off and the current delay time will be selected. Note that a delay time of 0 minutes is set before shipment from the manufacturing plant.
Interlocked mode This setting is used to determine the way in which the Lossnay will respond to starting and stopping of Interlocked to an external device such as an air conditioner, etc. *: Note that the delay time will be invalidated in situations where a setting of [3] has been selected for the Operation mode or when the Lossnay unit is interlocked with a building-management system.	Function selector button	INTRELOCKED SETTING 1	1. Press and hold the Function selector button for at least 5 seconds to display the interlock setting. Note that this is set to [1] before shipment from the manufacturing plant.
		INTRELOCKED SETTING 2 The above indicates a setting of [2].	2. Press the Function selector button to change the setting in the repeating sequence → 2 → 3 → 4 → 1 When the button is released before 5 seconds have elapsed, the display will turn off and the current setting will be selected.

Mode of Use (cont.)

Interlocked Operation mode types and actions

Display number	Interlocked Operation mode	Action (of the external unit)	Action (of the building-management system)
1	ON/OFF Interlocking: Subsequent operation with the remote controller possible (factory setting)	When the external device begins to operate, the Lossnay unit will also begin to operate; when the external air conditioner stops operating, the Lossnay unit will also stop operating.	The Lossnay unit toggles between ON and OFF conditions in response to signals (or pulses) which are input from a building-management system or the like.
2	ON Interlocking	When the external device begins to operate, the Lossnay unit will also begin to operate; stopping of the Lossnay unit must be performed using the remote controller.	The Lossnay unit begins to operate in response to a signal (or pulse) which is input from a building-management system or the like; stopping of the Lossnay unit must be performed using the remote controller.
3	OFF Interlocking	When the external device stops operating, the Lossnay unit will also stop operating; starting of the Lossnay unit must be performed using the remote controller.	The Lossnay unit stops operating in response to a signal (or pulse) which is input from a building-management system or the like; starting of the Lossnay unit must be performed using the remote controller.
4	ON/OFF Interlocking: External inputs have priority	Same as for setting 1 above; however, it is not possible to stop the Lossnay unit using the remote controller while the external device is operating.	Same as for setting 1 above.

13.3 Care and Upkeep

Actions required when the Filter Cleaning display begins to flash:

	Relevant button	Relevant display items	Sequence
Filter reset (i.e., clearing the total Lossnay-unit operating time)	FILTER (Press twice)	FILTER	Press the [Filter] button twice in immediate succession and confirm that the Filter display turns off.
Cleaning of the Lossnay unit's filter	Perform cleaning of the air filter and the Lossnay core in accordance with the instructions in the user's manual which was provided with the Lossnay unit.		
Care of the remote controller	To remove dirt from the remote controller's display window, wipe with a cloth to which detergent has been applied, and then wipe with a dry cloth to remove any remaining detergent. ● Paint thinner, alcohol, benzene, gasoline, kerosene, spray cleaner, cleaning alkali, etc.		

13.4 After-Sales Service

- If any of the following inspection numbers should be displayed on the remote controller, please contact the dealer from where this product was purchased for more information.

4000, 5101, 5102, 3602, 0900

- After-sales servicing of the remote controller unit should be ordered from the retail outlet from where this product was purchased.

13.5 Component Names and External Dimensions

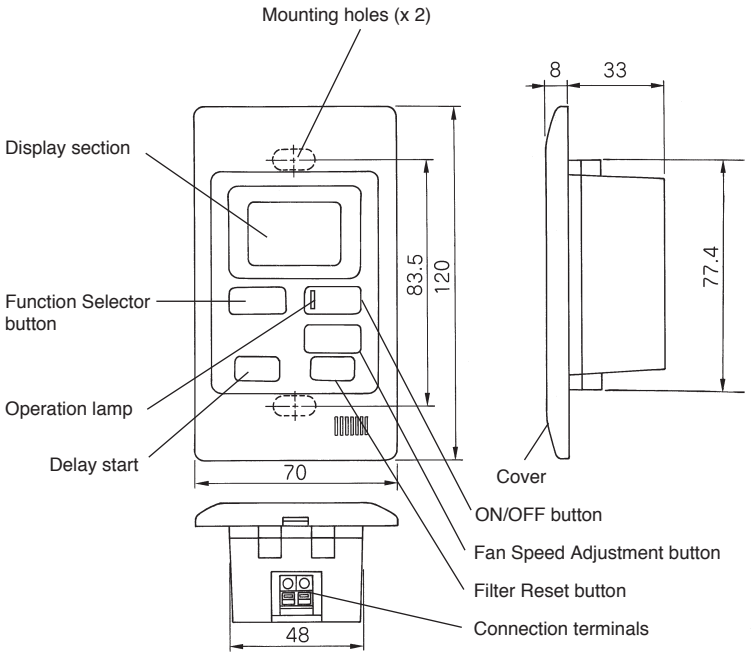

Accessory parts

Screws ..... (x 2)

Units: mm

Typical System Setup

<Independent operation of the Lossnay unit:>

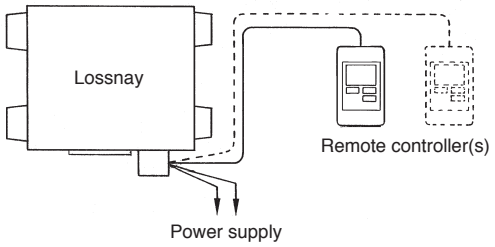

- When two individual remote controllers have been installed, the most recent control signals will be given priority.

<Interlocked operation with an air conditioners, etc.:>

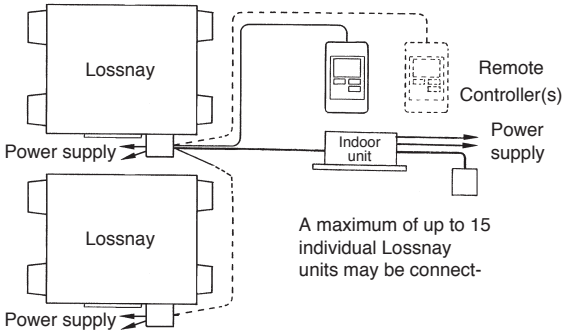

13.6 Installation Dimensions

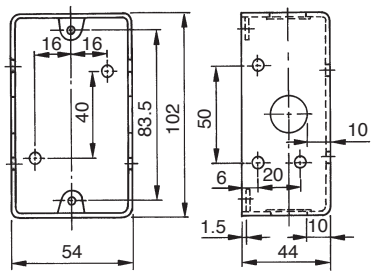

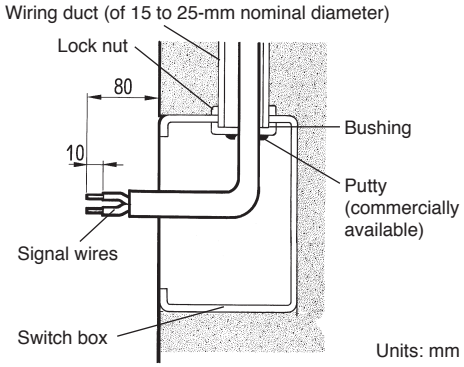

1. Wiring

(1) Perform insertion of a single-unit switch box (without a cover).
(2) Lay the wiring duct as far as the switch box.
(3) Connect the signal wires from the Lossnay unit to the switch box. (Note that 2-core telephone cable should be used; furthermore, this cable should be of PVC insulated PVC jacketed and either between ø0.65 and ø1.2, or between 0.3 mm^2 and 1.25 mm^2 in cross section.
(4) Use standard putty to create a secure seal so as to prevent frosting due to the intake of atmospheric air.

Note:

- Confirm that the Lossnay unit's power supply is not turned on before connecting its signal wire to the switch box.

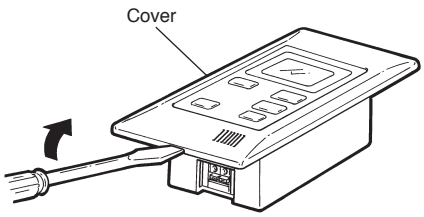

2. Cover removal

To remove the cover, insert the tip of a flat-head screwdriver into the notch and turn.

Note:

- Take care during removal of the cover to avoid any damage being caused.

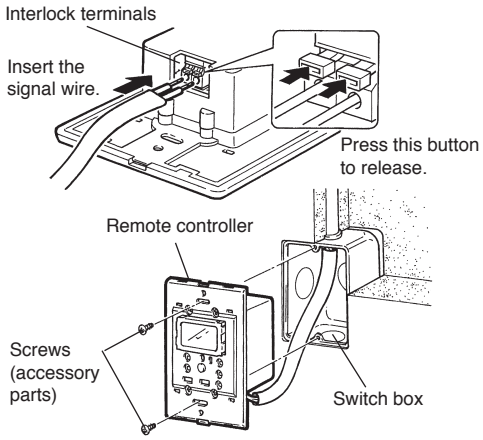

3. Connection of wiring and remote-controller mounting:

(1) Fully insert the (non-polar) signal wiring into the connection terminals.
(2) Gently tug on the wiring to confirm that it is being securely gripped.
(3) Mount the remote controller on the switch box using the two screws provided as accessory parts.

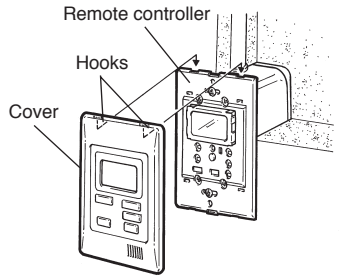

4. Mounting of the cover

To mount the cover, secure the two hooks at its upper edge and press on its lower section until it is heard to snap into place.

5. Switching of function selection

(1) Setting for filter maintenance

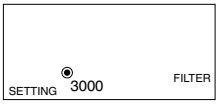

When Lossnay unit has operated for the time set as the cumulative-operation time, the Filter display will begin to flash indicating the cleaning of the filter is required. This setting time should be selected in accordance with the degree of contamination of the air in the unit's installation location. To perform an actual setting, press and hold the FILTER button for at least five seconds to display the setting value and to turn on the Filter display.

FILTER Then, press the Filter button to change the setting value in the repeating sequence
(factory setting)
3000 → 4500 → OFF → 1500

When the button is released before 5 seconds have elapsed, the display will turn off and the current replacement time will be selected. Note that this value is set to [3000] before shipment from the manufacturing plant.

(2) Setting for delayed interlocked operation

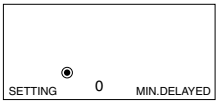

The delay-time setting is used to determine the length of the period that will elapse after the start of operation of the external devices until the Lossnay unit begins to operate. To perform an actual setting, press and hold the DELAY START button for at least five seconds while the Lossnay unit is currently stopped to display the setting value as shown in the diagram.

DELAY START Each time the DELAY START button is pressed, the delay time will change in accordance with the repeating sequence
(factory setting)
0 → 10 → 20 → 30 → 40 → 50 → 60 minutes.

(0:original setting at factory shipment)
When the button is released before 5 seconds have elapsed, the display will turn off and the current delay time will be selected. Note that a delay time of 0 minutes is set before shipment from the manufacturing plant. Note also that when OFF Interlock mode has been selected, this setting value will be invalidated.

(3) Setting for interlocked mode

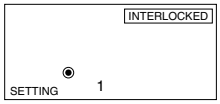

The Interlocked-mode setting is used to determine the way in which the Lossnay unit will respond to starting and stopping of interlocked external device such as an air conditioner, etc. To perform an actual setting, press and hold the button for at least five seconds while the Lossnay unit is currently stopped to display the setting value as shown in the diagram.

Press the switch to change the setting in the repeating sequence
(factory setting)
1 → 2 → 3 → 4

(1:original setting at factory shipment)
When the button is released before 5 seconds have elapsed, the display will turn off and the current setting will be selected. Note that this value is set to [1] before shipment from the manufacturing plant.

	Interlocked Operation mode	Action
1	ON/OFF Interlocking	Starting and stopping of the Lossnay unit will be performed from external device -- specifically, when the external device begins to operate, the Lossnay unit will also begin to operate; when the external device stops operating, the Lossnay unit will also stop operating. Note that subsequent operation using the remote controller will be possible.
2	ON Interlocking	Starting of the Lossnay unit will be performed from external device -- specifically, when the external device begins to operate, the Lossnay unit will also begin to operate. Stopping of the Lossnay unit must be performed using the remote controller.
3	OFF Interlocking	Stopping of the Lossnay unit will be performed from external device -- specifically, when the external device stops operating, the Lossnay unit will also stop operating. Starting of the Lossnay unit must be performed using the remote controller.
4	ON/OFF Interlocking (with external-signal priority)	Starting and stopping of the Lossnay unit will be performed from external device -- specifically, when the external device begins to operate, the Lossnay unit will also begin to operate; when the external device stops operating, the Lossnay unit will also stop operating. However, it is not possible to stop the Lossnay unit using the remote controller while the external device is operating.

13.7 Trial Operation

After installation has been completed, it is of the utmost importance that trial operation of the Lossnay unit and any external device such as an air conditioner is carried out.

When power supply is supplied to the remote controller the [HO] display will flash (for approximately 40 seconds); following this, the system will switch to operation-start mode.

	Relevant button	Relevant display items	Sequence
1		HO	Initiate the supply of power to the Lossnay unit. (The [HO] display will flash for approximately 40 seconds)
2	ON/OFF		Press the ON/OFF button. The Operation lamp will turn on and the Lossnay unit will begin to operate.
3		BY-PASS AUTO HEAT EX.	Press the Function selector button: Each time it is pressed, the corresponding display will change in accordance with the sequence [HEAT EX.] (non-automatic) → [BY-PASS] (non-automatic) → [AUTO].
4			Press the Fan Speed Adjustment button to toggle between Low and High.
5	ON/OFF		Press the Operation switch. The Operation lamp will turn off and the Lossnay unit will stop operating.

- Note that when the Ventilation Mode selector button is pressed, it will take up to 40 seconds before the operation of the damper changes accordingly.

If an inspection number should be flashed, refer to the following table and take the required action.

Inspection number	Cause	Required action
0900	The SW2 trial-operation switch from the Lossnay unit's controll box is On.	Turn off the trial-operation switch. (refer to page 72)
6608	If two or more Lossnay units are currently being used together, this number will indicate that the correct setting has not been performed using the units' Main/Sub switches.	Turn off the power supply and use the Main/Sub switches to specify one Lossnay unit as the Main and the others as Sub. Following this, turn the supply of power back on. Note that all Lossnay units are specified as Main before shipment from the manufacturing plant. (refer to page 66)
	If two remote controllers are currently being used together, this number may indicate that one of these controllers is not connected.	Turn off the power supply, connect the remote controller, and turn the power supply back on. (refer to page 78)
	If two remote controllers are used together, this number may indicate that both of these controllers are not set automatically when the power supply is turned on.	Turn off the power supply and turn the power supply back on.
	Multi-core cable has been used in place of a number of signal wires.	Switch back to the use of standard wiring and install each signal wire separately.
4000	A circuit abnormality has occurred in the Lossnay unit.	Turn off the supply of power and contact the retail outlet from where this product was purchased for further instructions.
5101	A breakdown has occurred in the Lossnay thermo (OA side).	
5102	A breakdown has occurred in the Lossnay thermo (RA side).	
3602	A breakdown has occurred in the damper motor.	

14. Lossnay M-NET Remote Controller (PZ-52SF-E)

14.1 Operation

[CENTRAL] Display
Displayed when remote operation is prohibited by a centralised control unit, etc.

Ventilation Modes
Indicates the ventilation mode.

Heat recovery (Heat exchange.) — HEAT EX.

By-pass — BY-PASS

Automatic (Heat ex./By-pass) — AUTO

[CHECK] Display
Displayed together with the address of the malfunctioning unit (3 digits) and the error code (4 digits).
(For detail, refer to the “11.Troubleshooting”)

[NOT AVAILABLE] Display
Displayed when the Lossnay unit cannot perform the function for the button that has been pressed. This display flashes concurrently with the display of the unavailable function.

[Function Selector] Button
Used to select the ventilation mode from among heat recovery (Heat exchange), by-pass or automatic.

[FILTER] Button
Press two times to reset the filter sign display.

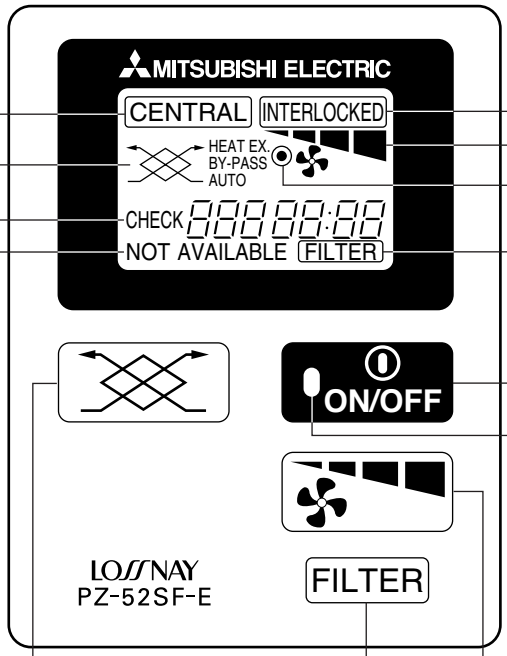

[INTERLOCKED] Display
Displayed when the Lossnay unit starts due to interlocked indoor unit or external signal.

[Fan speed] Display
Displays the selected fan speed.

Power Display
Displayed while Lossnay remote controller is powered on.

[FILTER] Display
Displayed when the accumulated operating time reaches the time set for air filter maintenance.

[ON/OFF] Button
Switches between run and stop. The lamp on the button stays lit during operation.

Operation lamp
On during operation. Flashes when a malfunction occurs.

[Fan Speed Adjustment] Button*
Used to select the fan speed of either "Low" or "High".

Low → High

***Note:**
- If this button is pressed when trying to switch the fan speed of a Lossnay unit not equipped with the fan speed adjustment, the fan speed display and the “NOT AVAILABLE” display flash and the fan speed does not change.

This remote controller can not be used on Lossnay units set for interlocked operation with Mr. Slim units.

14.2 Installing the Lossnay M-NET Remote Controller

14.2.1 Mount the switch box.

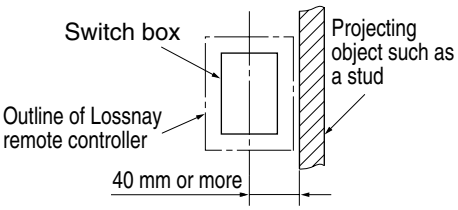

1. Install the switch box (purchased separately) as explained below.

Note:

- Be sure to install the switch box with the clearance shown in the illustration at the left. (Check the space between the unit and any projections, such as a stud.)
- Leave a space of 120 mm or more below the Lossnay M-NET remote controller so that a screwdriver can be used.

2. Purchase the thin copper wiring conduit, lock nuts and bushings separately.

14.2.2 Install the Lossnay M-NET Remote Controller.

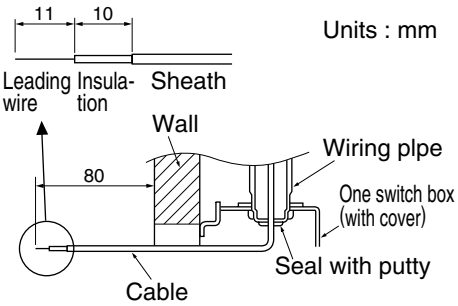

1. Pull out approximately 80 mm of cable from the wall and remove the insulation at the end.

2. Use putty to seal the cable hole in order to prevent insects from damaging the wiring and to prevent condensation on the Lossnay M-NET remote controller circuit board. If this hole is not sealed well, the Lossnay M-NET remote controller circuit board may be damaged.

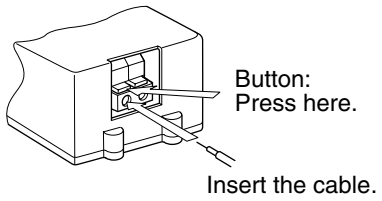

3. Connect the cable to the terminal board at the bottom rear of the Lossnay M-NET remote controller unit.

- The cable does not have polarity.
- When connecting stranded cable, hold down the tab on the terminal board while inserting the cable.
- The cable connects to the main terminal board when it is inserted into the bottom terminal.
- When disconnecting the cable, hold down the tab while pulling out the cable.
- After inserting the cable, slightly tug on it to check that it does not easily disconnect. If the cable is not securely connected, a short-circuit or malfunction may occur.

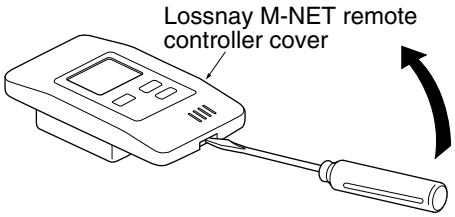

4. Remove the Lossnay M-NET remote controller cover using a standard screwdriver. Attach the Lossnay M-NET remote controller unit to the switch box using the two enclosed cross-recessed pan head screws. Use a standard screwdriver with a blade that is 4 mm or wider to remove the cover.

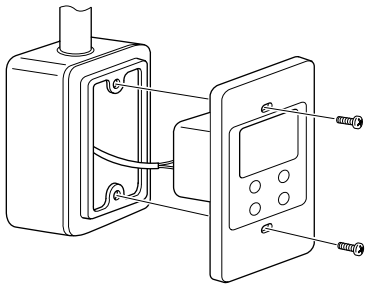

⚠ CAUTION:

- Forcing off the cover using a screwdriver that is less than 4 mm wide may result in damage to the equipment or injuries.
- Attach the Lossnay M-NET remote controller to a level surface. Do not overtighten the screws. Tight screws could damage or deform the case.

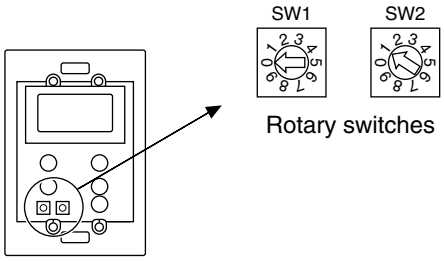

5. Set the Lossnay M-NET remote controller address.
   Set the Lossnay M-NET remote controller address using the rotary switches SW1 and SW2 on the front of the Lossnay M-NET remote controller.

■ Setting range: 101 to 200
- Rotary switch SW1 indicates the tens column and SW2 indicates the ones column. In addition, 100 is automatically added to the setting as shown below.

Rotary switch setting	01 – 99	00
Lossnay M-NET remote controller address	101 – 199	200

The address is set to 01 when the Lossnay M-NET remote controller is shipped from the manufacturer.

⚠ CAUTION:

The address must be set if the Lossnay M-NET remote controller is to be used as a part of a multi-unit system. Set the address according to its position in the system. In addition, refer to page 62 for more information concering the setting of the addresses.

6. After setting the Lossnay M-NET remote controller address, attach the Lossnay M-NET remote controller cover.
   When attaching the Lossnay M-NET remote controller cover, set the top of the cover onto the two top hooks and then push in the at the bottom of the cover until it snaps into place.
   If the bottom of the cover is attached first, the top of the cover cannot be attached. Forcefully pushing in the top of the cover to attach it may break the hooks.

14.3 Registering the Lossnay Unit with the Lossnay M-NET Remote Controller

Initial registration mode operation

A Lossnay unit must be registered with the Lossnay M-NET remote controller in a group arrangement. Register a Lossnay unit using the initial registration mode as shown below. In addition, the initial registration mode can be used to search for a Lossnay unit registered to the group or to delete a registration.

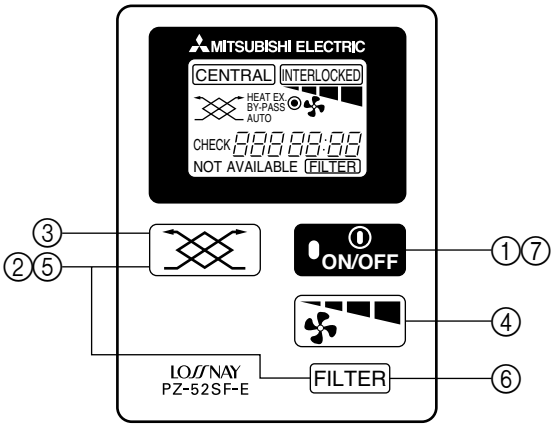

Setting Procedure

① Turn off the unit.
(Perform the following operation after “HO” flashes on the display.)

② Hold down both [ ] and [FILTER] for more than 2 seconds.
This starts the initial registration mode and the set Lossnay M-NET remote controller address flashes on the display.

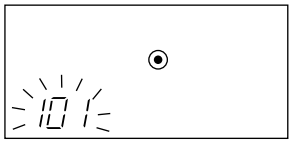

③ Press [ ] to select the address of the Lossnay unit that you wish to register with this Lossnay M-NET remote controller.
After the button is pressed once, the Lossnay M-NET remote controller address and then the Lossnay unit address is displayed. Afterwards, each press of the button increase the Lossnay unit address by 1 as shown below. Holding down the button changes the address more quickly.

[101] → [– – –] → [001] → [002] → · · · → [098] → [099]
(Set Lossnay M-NET remote controller address)
Flashes

④ When the address of the Lossnay unit that you wish to register is displayed, press [ ] to begin registering.
If the registration is completed correctly, the display appears as shown below.

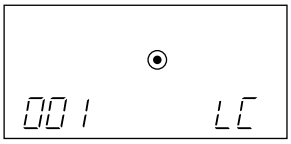

The Lossnay unit type, "LC", is displayed.

If the registration is not completed correctly, " 88 " flashes in the display. Check that the selected Lossnay unit address and the wiring are correct.

⑤ After registering, hold down both [ ] and [FILTER] for more than 2 seconds to end the initial registration mode and the normal display appears.

Confirmation of registered address

⑥ To display the addresses of the Lossnay units that are registered with this Lossnay M-NET remote controller.
Each press of [FILTER] in step ② or ④ displays the address of a registered Lossnay unit and its type, "LC".
If no Lossnay unit is registered, " ---" appears in the address display and no type is displayed.

Address deletion

⑦ To delete the address of a Lossnay unit registered with this Lossnay M-NET remote controller.
Hold down [ON/OFF] twice for 2 seconds each time in either step ④ or after the registration is completed to delete the registration of the Lossnay unit that is currently displayed.

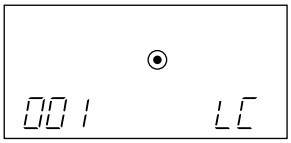

When the display appears as shown above, hold down [ON/OFF] for 2 seconds each time.

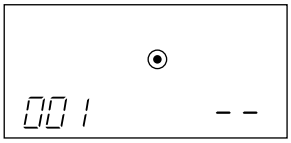

If the registration is deleted correctly, " – – " appears in the display.
If the registration is not deleted correctly, " 88 " flashes in the display. Check that the selected Lossnay unit addresses and the wiring are correct.

Note:

- In the case of LGH-15 to 200RX4-E, up to 16 Lossnay units can be registered.
- If the registration cannot be completed or deleted correctly, either the set address or the wiring of the Lossnay unit whose registration you wish to add or delete may be incorrect. Check the wiring and the address that is set.

15. Appendix

15.1 System Controller (G-50A)

15.1.1 Operation setting

- There are two methods for the operation, performing the operation classified by groups or collective operation.

Group operation setting

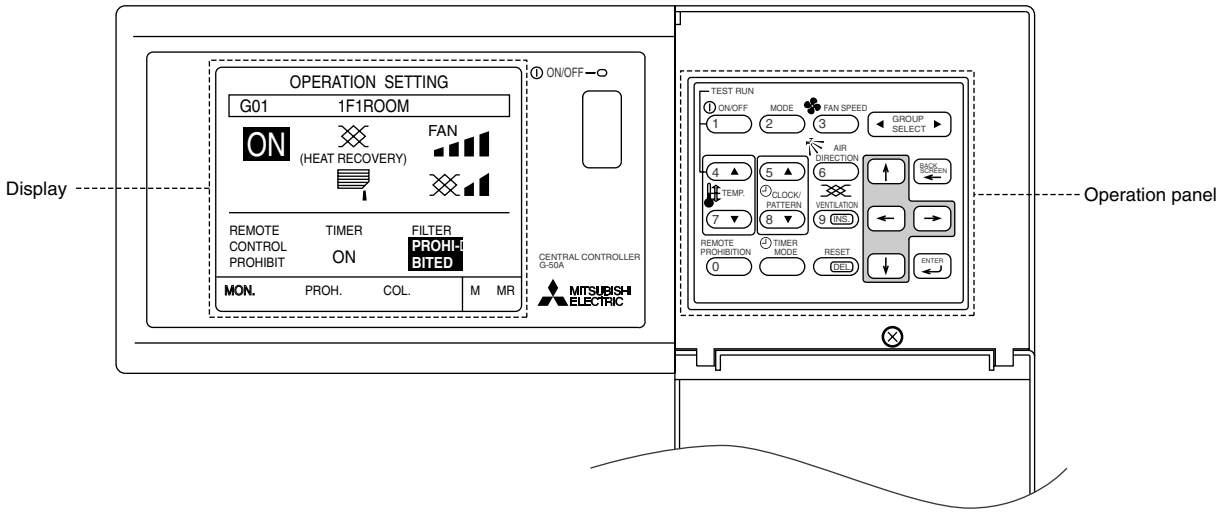

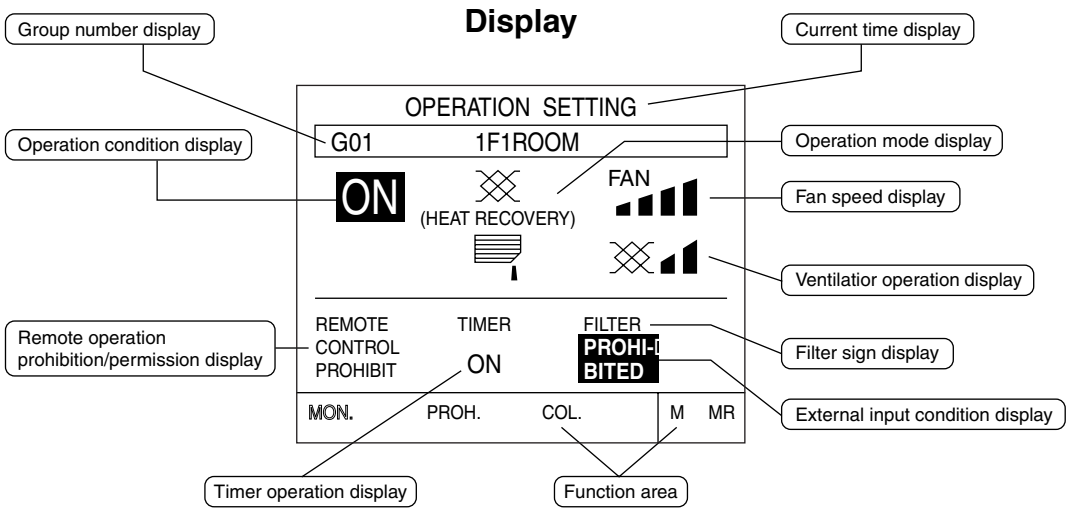

Operation panel

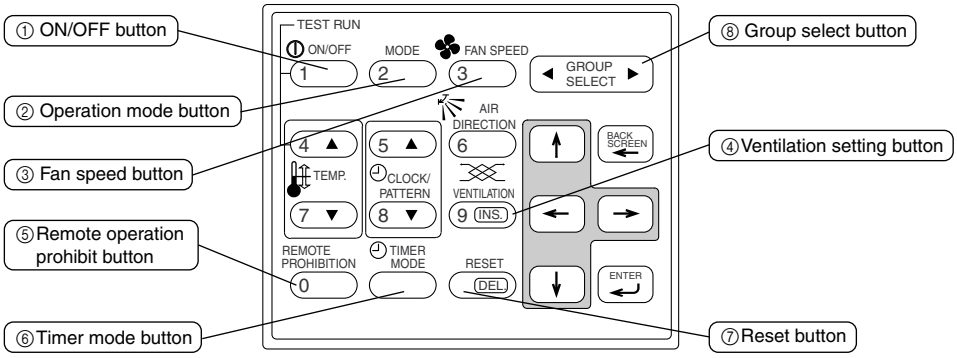

No.	Name of switches	Function	Display
①	ON/OFF button	The ON/OFF condition of the displayed group is switched.	Operation status display → [ON] → [OFF] → * When there is an interlocked Lossnay unit, turning this switch ON starts operation in a [High] fan speed state.
②	Operation mode button	Used to the type of the operation mode selection.	On the group composed of independent Lossnay units, operation mode is selected in a sequence that goes from HEAT RECOVERY, AUTO, BYPASS and back to HEAT RECOVERY. → (HEAT RECOVERY) → AUTO → BYPASS →
③	Fan speed button	The Fan speed can be selected as high or low.	Fan speed display → FAN → FAN → * In the case of a group composed only of Lossnay units this does not display.
④	Ventilation setting button	The operation mode of the interlocked Lossnay unit can be performed. * Where there is no interlocked Lossnay unit, the operation of this button is invalid.	Ventilation volume setting display → (Low) → (High) → (Ventilation off) →
⑤	Remote operation prohibit button	Used to prohibit for the local remote control.	PROHIBIT : Local remote control specified on the prohibit setting screen is not possible. PERMIT : Local remote control is possible.
⑥	Timer more button	The timer operation can be performed according to a previously set operation pattern.	Timer operation display [ON] → [OFF]
⑦	Reset button	The filter sign display reset is performed. The reset processing is completed by pressing this button two times.	Filter display [Filter] → No display
⑧	Group select button	The display group is changed.	Group number display This switch displays 1 to 50 group numbers. The switch can also display group names.

15.1.2 Initial setting

DIP switch and rotary switch setting

- Remove the cover from the controller and perform the DIP switch and rotary switch setting.

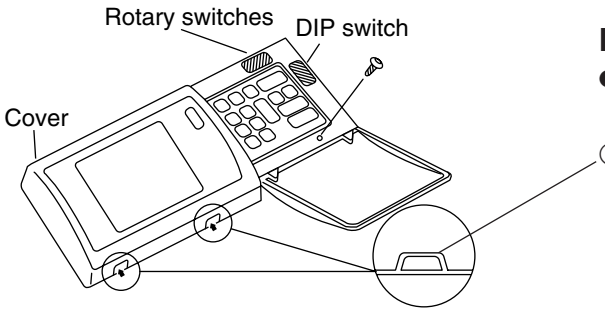

① Remove the cover screw.

Note:

- When this controller is shipped from the factory, the screw is contained in the same package.

② Insert a standard screwdriver into the slot and twist it to remove the cover from the upper case.

1. DIP switch setting

- The functions of this controller are set according to the DIP switch settings.
- Each switch is set to the OFF and ON positions as shown below.

- The functions of this controller are selected by DIP switch.
- The DIP switches are set to OFF when the controller is shipped from the factory.

DIP switch

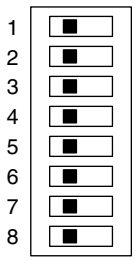

1	OFF: User operation mode	ON: Initial setting mode
2	OFF: Master system controller	ON: Slave system controller
3	OFF: No K-transmission converter installed	ON: K-transmission converter installed
4	OFF: Operation prohibit setting valid	ON: Operation prohibit setting invalid
5	Reserved for future use (Leave this switch set to OFF)	
6, 7	External input changeover	
8	The range of a controller which the operation is prohibited OFF: Both of the system controller and the local remote controller ON : Only the local remote controller	

2. Rotary switch setting

- The address of this controller is set by the rotary switch.
- When this controller is shipped from the factory, the address is set to “000”.

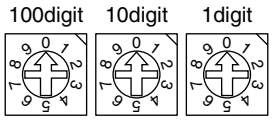

(Example: Address setting: 000)

Setting range: 000, 201-250
(Always set the address to “000” when K-transmission converter is being controlled.)

15.1.3 Group configuration setting

- Registration can be made for the indoor units, local remote controllers and slave system controllers in the same group.
- Registration can also be performed for the group that is composed of only Lossnay.

Example of a group configuration

- Supply the power from the power supply unit (PAC-SC50KUA) through the M-NET transmission cable.

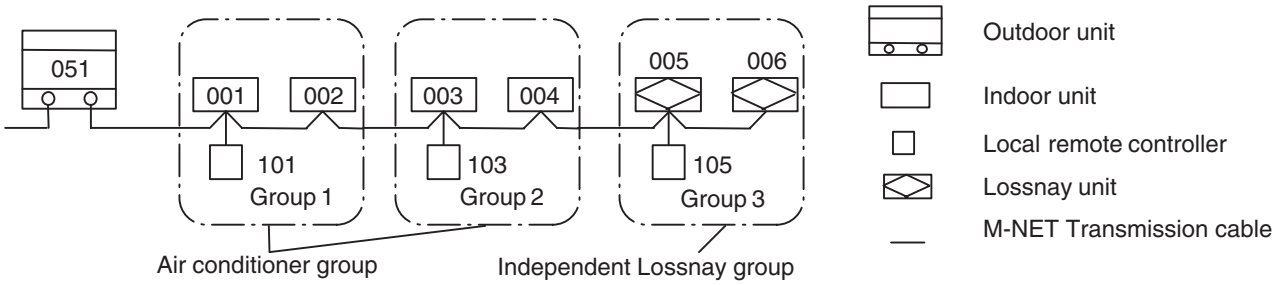

- Perform the following procedures to set the group configuration because the interlocked operation setting will not be performed for the group configuration settings that have not been set.

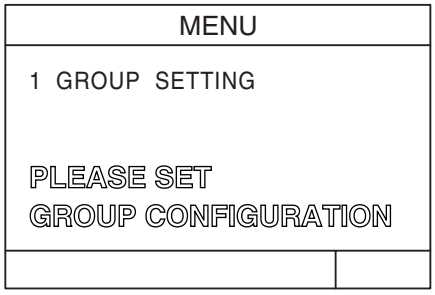

① When the power is supplied to the controller, the screen shown on the left is displayed.

② Press the [1] button to select "1 GROUP SETTING".

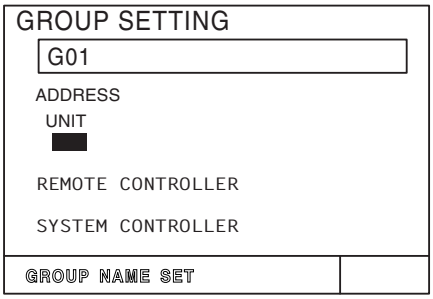

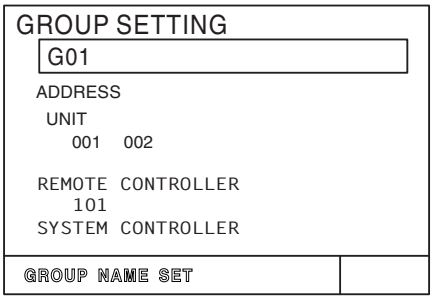

The configuration setting screen is displayed.

③ Press the [◀ GROUP SELECT ▶] button to display the group number to be set.

④ Press the [←] [→] [↑] [↓] button to move the cursor to the address display position to be set.

⑤ Use the numeric keypad to set the address of the indoor unit, local remote controller, and slave system controller in the display group number.

Operation example

For an indoor unit with an address of 012.

1) Input "0" 0
2) Input "1" 01
3) Input "2" 012
4) Press the [→] button. 012
   * It is also possible to enter "1" "2".

When the input is incorrect

Press the [→] button and continue to input the data. After pressing the [→] button, move the cursor to the addresses to be deleted and press the [RESET DEL.] button to delete these addresses.

Note:

- Do not set Lossnay units with the intention of interlocked operation, such as Lossnay, on this group setting menu.
- Even if the addresses are input in a non-sequential order, they will be switched to sequential order starting with the lowest address.
- The independent Lossnay unit cannot be set to the indoor unit group and it cannot be set as an interlocked Lossnay unit.

```
GROUP SETTING
  G03
 ADDRESS
  UNIT
     005   006

 REMOTE CONTROLLER

 SYSTEM CONTROLLER
GROUP NAME SET
```

This is the procedure for registering all units and controllers in the displayed group number.

⑥ Repeat operation ③ to ⑤ to set all the groups controlled by this controller.

⑦ When all settings have been completed, press the [BACK SCREEN] button.

Note:

- Be sure to set the local remote controller address when there is a local remote controller in the system. The local remote controller will not operate if the address setting is not performed.

```
INITIAL SETTING
PLEASE WAIT
```

⑧ The initial setting screen is displayed.
Registration processing for the group configuration information and initial set up processing for each unit and each controller is executed when DIP switch No. 1 is set to OFF.
(This process takes approximately five minutes.)

Note:

- If DIP switch No. 1 is set to ON at this time, the initial setting menu screen is displayed without the initial setting screen.

⑨ The user operation menu is displayed.
Once the group configuration settings are completed, user operation can be performed. Refer to Section “15.1.4 Interlocked operation setting” when performing interlock operation settings.

Additions:

Deleting all group configuration data.

- Display “G00”on the group configuration setting screen and press the [DEL] button two times consecutively to delete all group configuration data and all interlocked operation data.

Note:

- Group registration cannot be made when this unit is set to the slave system controller by the DIP switch No. 2. However, confirmation of the contents of the group registration is possible.
- To change the group configuration setting, set DIP switch No. 1 in the cover to ON. This will bring up the initial setting menu screen. From that screen, select “1 GROUP SETTING” on the setting menu screen. Wait for the screen to appear and then change the setting.

15.1.4 Interlocked operation setting

- This is the procedure for registering the interlocked operation of an Lossnay unit with a single or multiple indoor units. All indoor units to be interlocked with an Lossnay unit for operation should be registered as group before- hand.

Example of an interlocked group configuration

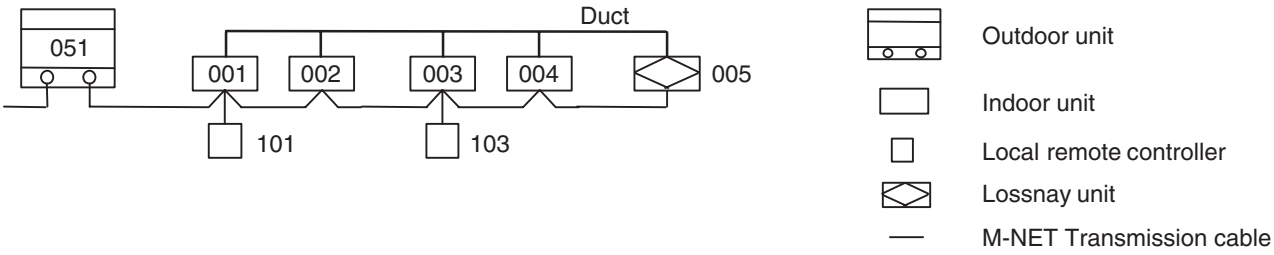

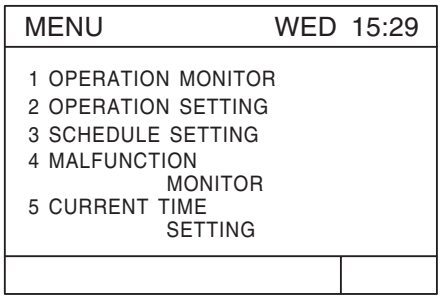

① Set DIP switch No. 1 in the cover to ON.

Note:

- Always uses the DIP switch No. 1 to change the setting.
  This operation will be invalid if performed on another screen.

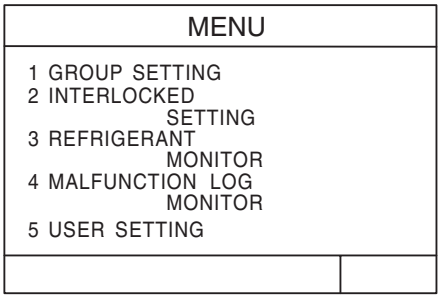

② The initial menu screen is displayed.

③ Press the [2] button to select "2 INTERLOCKED SETTING".

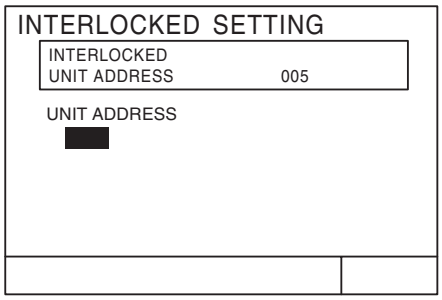

④ The interlocked setting screen is displayed.
The minimum address of the interlocked processing unit that can be set to interlocked operation with an indoor unit is displayed in "INTERLOCKED UNIT ADDRESS". The cursor is displayed in the unit address display position.

⑤ Press the [◀ GROUP SELECT ▶] button to display the address number of the interlocked Lossnay unit that the setting will be performed on.

```
INTERLOCKED SETTING
  INTERLOCKED
  UNIT ADDRESS          005

  UNIT ADDRESS
  ■
```

⑥ Use the numeric keypad to set the address of the indoor unit to operate with the displayed Lossnay unit.

Operation example

For an indoor unit with an address of 012.

1) Input “0”. 0
2) Input “1”. 01
3) Input “2”. 012
4) Press the [→] button. 012 ■
   * It is also possible to enter “1” “2”.

When the input is incorrect

Press the [→] button and continue to input the data. After pressing the [→] button, move the cursor to the addresses to be deleted and press the [RESET DEL] button to delete these addresses.

```
INTERLOCKED SETTING
  INTERLOCKED
  UNIT ADDRESS          005

  UNIT ADDRESS
    001   002   003   004   ■
```

⑦ Set the indoor units to operate with the displayed interlocked Lossnay unit.
⑧ Repeat operation ⑤ to ⑦ to set the indoor units in interlocked operation controlled by this controller.
⑨ When all settings are completed, press the [BACK SCREEN] button.

```
MENU
1 GROUP SETTING
2 INTERLOCKED
          SETTING
3 REFRIGERANT
          MONITOR
4 MALFUNCTION
          MONITOR
5 USER SETTING
```

Initial setting screen is displayed.
This ends the interlocked operation setting.
Return to where user operations are performed to set DIP switch No. 1 to OFF.
After the initial settings processing has been completed, the initial setting screen will be displayed.

Note:

- The interlocked operation settings cannot be adjusted when this unit is set to being a slave system controller by the DIP switch No. 2. However, monitoring of the contents of the interlocked operation settings is possible.

Please refer to the related documentation for details about the System controller.

15.2 Remote Controllers for Mr. Slim indoor unit

A-control remote controller (PAR-20MAA)

Without Lossnay interlock switches and indicators.

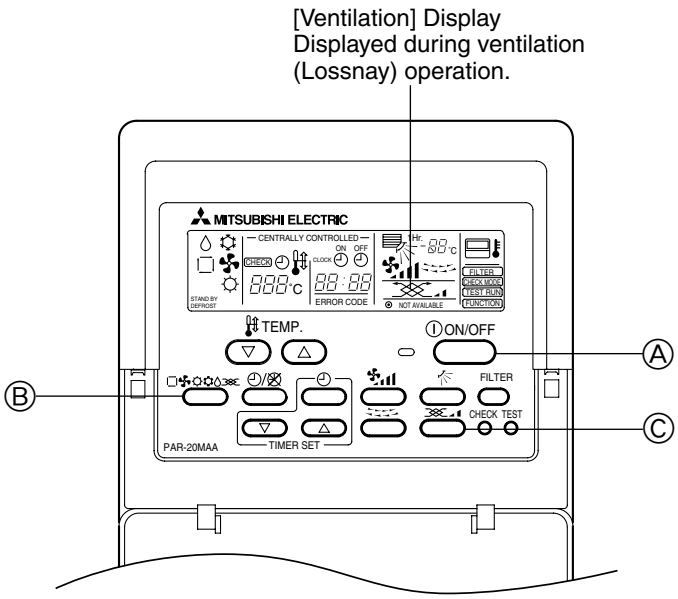

15.2.1 Method for operating Lossnay with A-control remote controller (when interlocked with Mr. Slim)

When operating Lossnay separately

- Press the “ON/OFF” button Ⓐ.
- Press the “Selecting operation” button Ⓑ. The display will show .
  - Use when you only want ventilation and there is no need for heating or cooling operation.
  - The does not display when the unit is not connected for interlocked operation with a ventilation unit.

When changing Lossnay fan speed

- Press the “Ventilation” button Ⓒ.

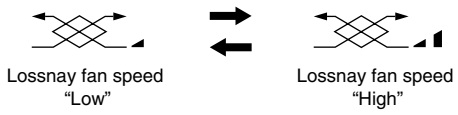

  - The setting changes each time you press the button.

When running interlocked ventilation operation

- Press the “ON/OFF” button Ⓐ.
  - If there is a ventilation unit connected for interlocked operation, the ventilation unit will start operating automatically.
- Press the “Ventilation” button Ⓒ.
  - The Lossnay fan speed can be set to High or Low.

15.2.2 Function Selection

Perform only when change is necessary with Mr. SLIM air conditioner.
(Cannot be performed with CITY MULTI control system.)

Set the functions of each indoor unit from the remote controller, as required. The functions of each indoor unit can be selected only from the remote controller. Set the functions by selecting the necessary items from Table 1.

Table 1. Function selection contents (For a detailed description of the factory settings and mode of each indoor unit, refer to the indoor unit installation manual.)

Function	Settings	Mode No.	Setting No.	Check	Object unit address No.
Power failure automatic recovery	Not available	01	1		Unit address No. 00
	Available (Approximate 4 minutes wait-period after power is restored.)	01	2		
Indoor temperature detecting	Indoor unit operating average	02	1		
	Set by indoor unit s remote controller	02	2		
	Remote controller s internal sensor	02	3		These items are set for all indoor units.
LOSSNAY connectivity	Not Supported	03	1		
	Supported (indoor unit is not equipped with outdoor-air intake)	03	2		
	Supported (indoor unit is equipped with outdoor-air intake)	03	3		
Power voltage	240 V	04	1		
	220 V, 230 V	04	2		
AUTO mode	Energy saving cycle automatically enabled	05	1		
	Energy saving cycle automatically disabled	05	2		
Filter sign	100 Hr	07	1		Unit address No. 01 to 04 or AL
	2500 Hr	07	2		
	No filter sign indicator	07	3		
Fan speed	Quiet / Standard / High ceiling ① / High ceiling ② (PL(H)(A)-P·AA type)	08	1		
	Standard / High ceiling ① / High ceiling ② (PL(H)(A)-P·AA type)	08	2		
	High ceiling / High ceiling ② (PL(H)(A)-P·AA type)	08	3		
No. of air outlets	4 directions	09	1		
	3 directions	09	2		
	2 directions	09	3		These items are set for each indoor unit.
Installed options (high-performance filter)	Not supported	10	1		
	Supported	10	2		
Up/down vane setting	No vanes	11	1		
	Equipped with vanes (No. 1 set)	11	2		
	Equipped with vanes (No. 2 set)	11	3		
Energy saving air flow (Heating mode)	Disabled	12	1		
	Enabled	12	2		
Humidifier (Direct Add-on type)	Not supported	13	1		
	Supported	13	2		

NOTE: When the indoor unit functions were changed using the function selection after installation is complete, always indicate the set contents by entering ◯ or other mark in the appropr iate check field of Table 1.

[Function selection flow]

First grasp the function selection flow. The following describes setting of Room temperature detection position of Table 1 as an example.
(For the actual setting procedure, see [Setting procedure] ① to ⑩.)

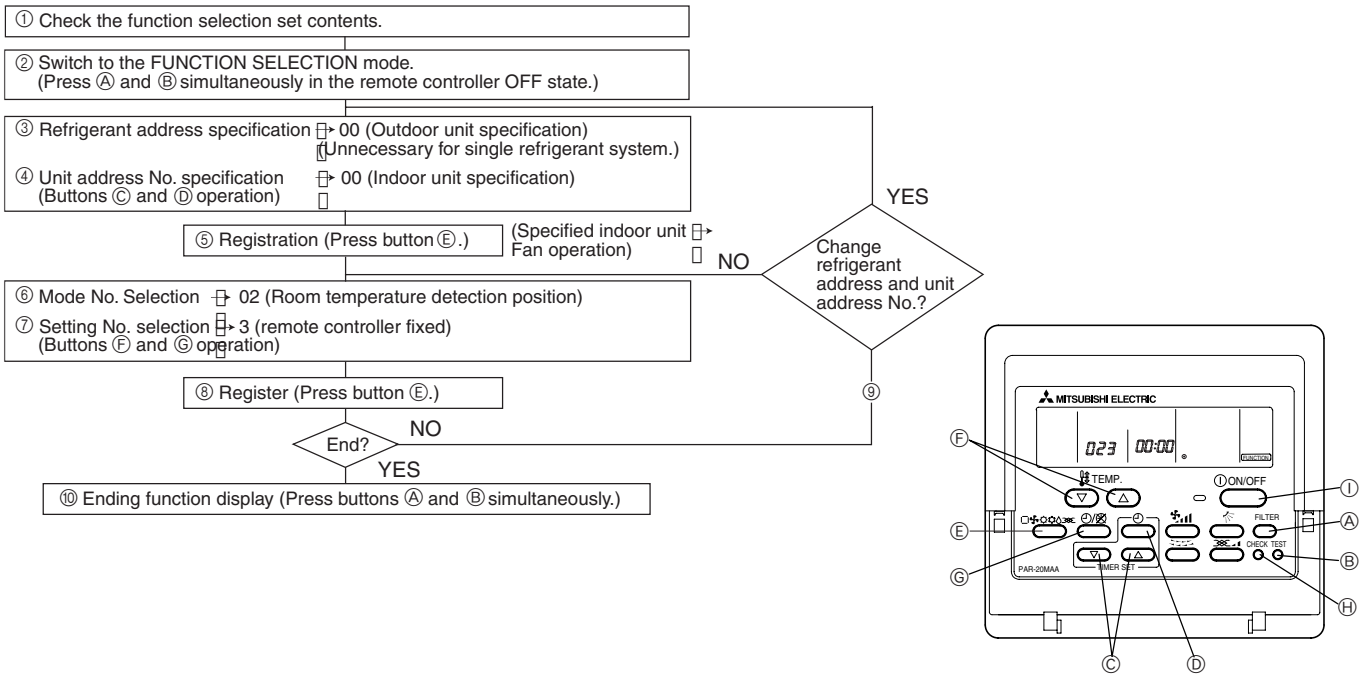

[Procedure] (Set only when change is necessary.)

① Check the set contents of each mode. When the set contents of a mode were changed by function selection, the functions of that mode also change.
Check the set contents as described in steps ② to ⑦ and change the setting based on the entries in the Table 1 check field. For the factory settings, refer to the indoor unit installation manual.

② Set the remote controller to Off.
Press and hold down the Ⓐ [FILTER] and Ⓑ [TEST] buttons at the same time for two seconds or longer.
"FUNCTION" blinks for a while, then the remote controller display changes to the display shown below.

③ Set the outdoor unit refrigerant address No.
When the Ⓒ [TIMER SET (▽) and (△)] buttons are pressed, the refrigerant address No. decreases and increases between 00 and 15.
Set it to the refrigerant address No. whose function you want to select.
(This step is unnecessary for single refrigerant system.)

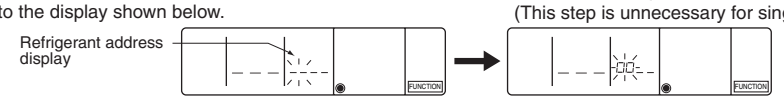

* If the remote controller enters the OFF state after the "FUNCTION" and room temperature displays " 88 " have flashes for two seconds, communication is probably abnormal. Make sure there are no noise sources near the transmission line.

NOTE: If you make a mistake during operation, end function selection by step ⑩ and repeat selection from step ②.

④ Set the indoor unit address No.
Press the Ⓓ [Timer selection] button. The unit address No. display "– –" flashes.

When the Ⓒ [TIMER SET (▽) and (△)] buttons are pressed, the unit address No. changes in 00 → 01 → 02 → 03 → 04 → AL order. Set it to the unit address No. of the indoor unit whose functions you want to set.

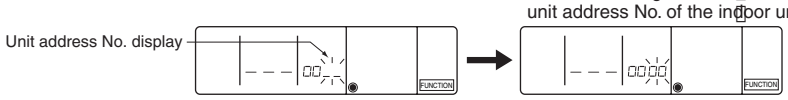

* When setting mode 1 to 3, set the unit address No. to "00".
* When setting modes 7 to 11:
- When setting for each indoor unit, set the unit address No. to "01-04".
- When batch setting for all indoor units, set the unit address No. to "AL".

⑤ Refrigerant address and unit address No. registration
Press the Ⓔ [Mode selection] button. The refrigerant address and unit address No. are registered.
After a while, the mode No. display "– –" flashes.

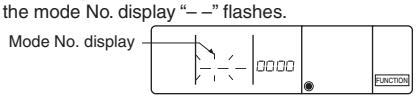

* When " 88 " flashes at the room temperature display, the selected refrigerant address is not in the system.
When "F" is displayed at the unit address No. display, and when it flashes together with the refrigerant address display, the selected unit address No. does not exist. Correctly set the refrigerant address and unit address No. by repeating steps ② and ③.

When registered using the Ⓔ [Mode selection] button, the registered indoor unit begins fan operation. When you want to know the location of the indoor units of the unit address No. whose functions were selected, check here. When the unit address No. is 00 or AL, all the indoor units of the selected refrigerant address perform the fan operation.

Ex) When refrigerant address 00, unit address No. = 02 registered

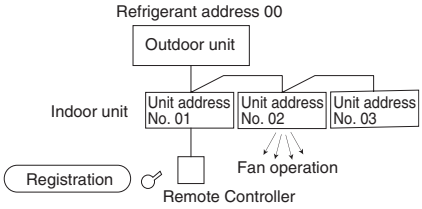

* When grouping by different refrigerant systems and an indoor unit other than the specified refrigerant address performs the fan operation, the refrigerant address set here is probably duplicated.
Recheck the refrigerant address at the outdoor unit rotary switches.

⑥ Mode No. selection
Select the mode No. you want to set with the Ⓕ [TEMP. (▽) and (△)] buttons. (Only the settable mode numbers can be selected.)

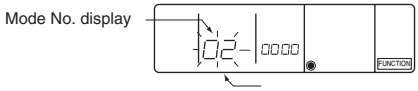

Mode No. 02 = Room temperature detection position

⑦ Select the setting contents of the selected mode.
When the Ⓖ [Timer selection] button is pressed, the current setting No. flashes. Use this to check the currently set contents.

Select the setting No. using the Ⓕ [TEMP. (▽) and (△)] buttons.

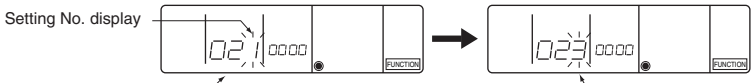

Setting No. 1 = Simultaneous operation indoor units balance

Setting No. 3 = Remote controller built-in sensor

⑧ The contents set at steps ③ to ⑦ are registered.
When the Ⓔ [Mode selection] button is pressed, the mode No. and setting No. flash and registration begins. The flashing mode No. and setting No. change to a steady light and setting ends.

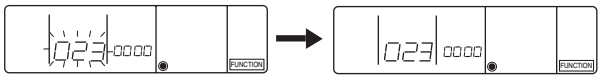

* When "– –" appears at the mode No. and setting No. displays and " 88 " flashes at the room temperature display, communication is probably abnormal. Make sure there are no noise sources near the transmission line.

⑨ To select more functions, repeat steps ③ to ⑧.

⑩ End function selection.
Press and hold down the Ⓐ [FILTER] and Ⓑ [TEST] buttons at the same time for two seconds or longer.
After a while, the function selection display disappears and the remote controller returns to the air conditioner off display.

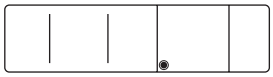

* Do not operate the air conditioner from the remote controller for 30 seconds after the end of function selection.

NOTE: When the functions of an indoor unit were changed by function selection after the end of installation, always indicate the set contents by entering a ⓘ or other mark in the appropriate check field of Table 1.

15.3 Network Remote Controller (PAR-F27MEA)

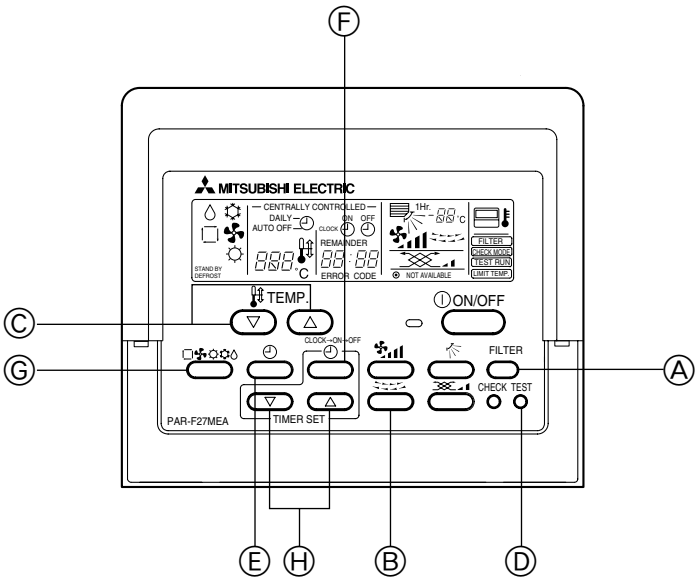

15.3.1 Method for Operating Lossnay with Network remote Controller (When Interlocked with City Multi Indoor Unit)

Operation method is same as A-control remote controller. Refer to page 93.

15.3.2 Initial registration mode

This is the procedure for registering the address of the indoor unit with the remote controller.

① Stop the remote controller by pressing the [ON/OFF] button.
- If not indoor unit is registered, the “HO” display appears in the room temperature display. In this condition, registration can be performed as follows.

② Display “INDOOR UNIT ADDRESS NO.”
- Press and hold down both the [FILTER] button (shown as Ⓐ) and the “Louver” button (shown as Ⓑ) at the same time for 2 seconds. The following display will appear.

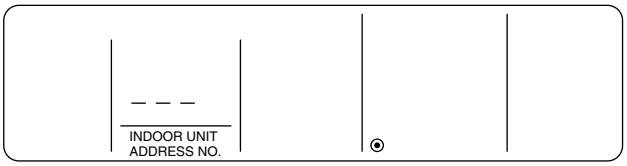

15.3.3 Interlocked registration

③ Display the “OA UNIT ADDRESS NO.”
- Press the “Operation mode” button (shown as Ⓖ) and the following display will appear.
  Press once again to return to “INDOOR UNIT ADDRESS NO.” shown in Step ②.

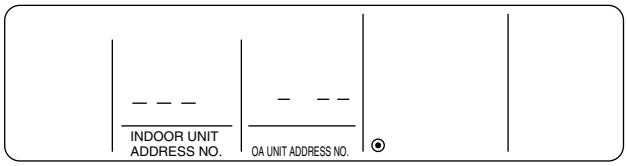

Both “INDOOR UNIT ADDRESS NO.” and “OA UNIT ADDRESS NO.” will appear simultaneously.

- Use the ▲ and ▼ [TEMP] buttons (shown as Ⓒ) to select the address of the indoor unit.
  Set it to the address of the indoor unit to be interlocked.
- Use the ▲ and ▼ [TIMER SET] buttons (shown as Ⓗ) to select the address of the Lossnay unit to be registered.

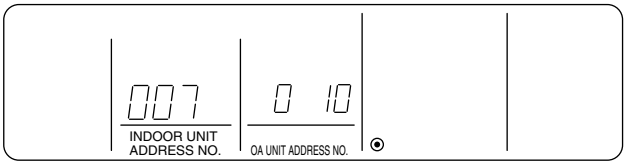

④ To register the interlocked operation of the Lossnay unit and the indoor unit.

- Use the [TEST RUN] buttons (shown as Ⓓ) to register the relationship of the interlock between the Lossnay indicated in “OA UNIT ADDRESS NO.” and the indoor unit indicated in “INDOOR UNIT ADDRESS NO.”

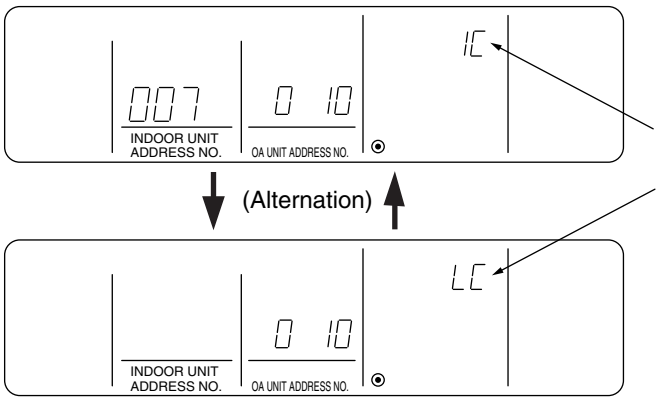

- When registration has been completed successfully, the display alternates between the two displays shown in the figure.
- If there is an error in the registration, “ 88 ” will flash. This indicates the number of the unit.

⑤ To return to the normal operation mode.

- Press and hold down both the [FILTER] button (shown as Ⓐ) and the “Louver” button (shown as Ⓑ) at the same time. This returns the unit to the normal operation mode. (OFF)

Note:

- Be sure to set the indoor unit to the lowest address number in a group followed by the Lossnay unit. If this is not performed, the Lossnay unit will not operate.
- If there are multiple indoor units to be interlocked with the Lossnay unit, perform Steps ③ and ④ above for each of them.

15.3.4 Searching for interlocked registered units

⑥ Display the indoor unit address No. at “OA UNIT ADDRESS NO.”

- Press the “Operation mode” button (shown as Ⓖ) and the following display will appear. Press once again to return to “INDOOR UNIT ADDRESS NO.” shown in Step ②.

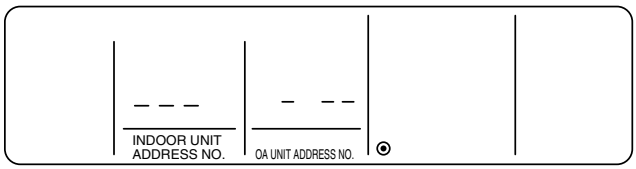

⑦ Use the ▲ and ▼ [TIMER SET] buttons (shown as Ⓗ) to select the address of the indoor unit to be registered. Select the indoor unit address number to be confirmed.

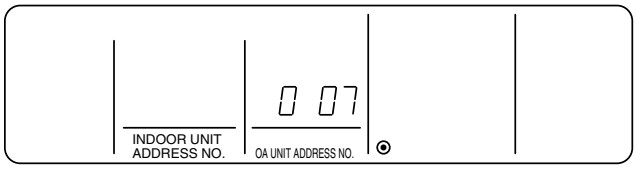

⑧ Press the “Timer/continuous” button (shown as Ⓔ). The display alternates between the two displays shown here.

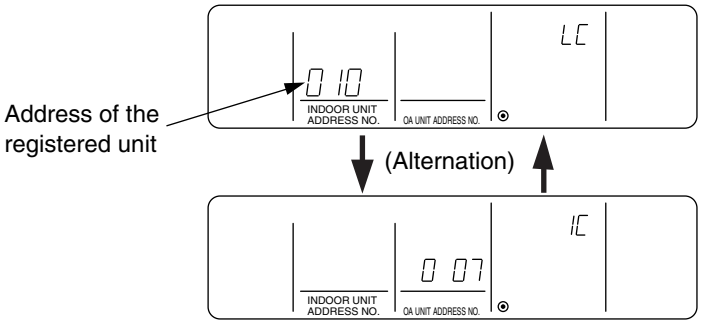

⑨ Press the “Timer/continuous” button (shown as Ⓔ) once again. The display will now alternate between the registered unit and the address of the next registered unit. (The way of display is the same as in step ⑧.)

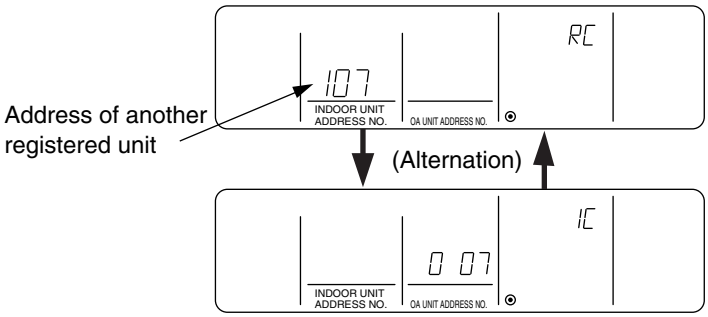

⑩ To return to the normal operation mode.
Press and hold down both the [FILTER] button (shown as Ⓐ) and the “Louver” button (shown as Ⓑ) at the same time.
This returns the unit to the normal operation mode (OFF).

15.3.5 To delete linked unit entries

⑪ From the initial registration mode display, perform an address search for linked units. Display the addresses of the Lossnay units to be deleted. Press the “Time conversion” button (shown as Ⓕ) twice to delete these units which are displayed according to their address number with the indoor unit.

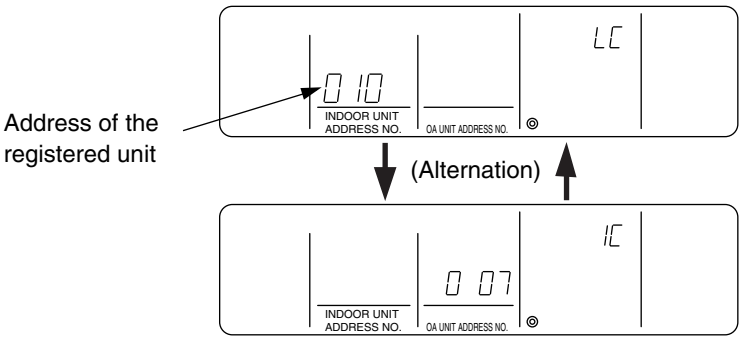

When the above is displayed, press the “Time conversion” button (shown as Ⓕ) twice.

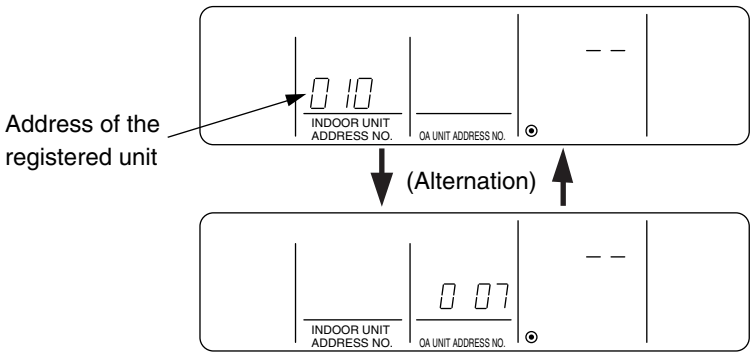

If the transmission is faulty, the properties will flash as “ 88 ”. Check the wiring and the address definitions and then do the above operation again.

⑫ To return to the normal operation mode.
Press and hold down both the [FILTER] button (shown as Ⓐ) and the “Louver” button (shown as Ⓑ) at the same time.
This returns the unit to the normal operation mode (OFF).

MITSUBISHI ELECTRIC CORPORATION

Y05-001 Jun.2005(MEE)

Specifications subject to change without notice.